City of Worthington

ARCHITECTURAL REVIEW BOARD

Certificate of Appropriateness
Application

Case # AR 47-13
Date Received 5-31-13
Fee n/a
Meeting Date 6-27-13
Filing Deadline 6-24-13
Receipt # _____

RECEIVED MAY 3 1 2013

1. **Property Location** 6555 Worthington Galena Road, Worthington, OH
2. **Present/Proposed Use** City of Worthington Police Headquarters
3. **Zoning District** C-3: Institutions & Offices
4. **Applicant** Alan Moody (DLZ Architecture)

   Address 6121 Huntley Road, Columbus, OH

   Phone Number(s) 614-888-00040, Ext. 1243
5. **Property Owner** City of Worthington

   Address 6550 North High Street, Worthington, OH

   Phone Number(s) 614-436-3100
6. **Project Description** Repair and/or replacement of all exterior wood , replacement of wood roof shakes, and repair/replacement of south exterior stairway.
7. **Project Details:**

   a) **Design** Replace wood roof shakes with high performance fiberglass singles that have the appearance of wood shakes without the maintenance wood shakes require. Each side of south exterior stairway shall be lined with landscape block similar to what is used for landscaping around building.

   b) **Color** Autumn Blend which has a color similar to cedar shakes.

   c) **Size** N/A

   d) **Approximate Cost** $45,000 **Expected Completion Date** October 2013

PLEASE READ THE FOLLOWING STATEMENTAND SIGN YOUR NAME:

The information contained in this application and in all attachments is true and correct to the best of my knowledge. I further acknowledge that I have familiarized myself with all applicable sections of the Worthington Codified Ordinances and will comply with all applicable regulations.

Applicant (Signature) _____ Date 5/31/13

Property Owner (Signature) _____ Date _____

Abutting Property Owners List for
6555 Worthington-Galena Rd.

United Methodist Children's Home		1033 N. High St.	Worthington, OH 43085
Laurel Realty Properties, LLC		8181 Worthington Rd.	Westerville, OH 43082
Worthinglen Condo Assoc.	c/o Becky Lineberger, P	74 Glen Dr.	Worthington, OH 43085
6565 Worthington LLC		642 Eagle Ridge Ct.	Powell, OH 43065
6600 North High Street LLC		P.O. Box 780	Worthington, OH 43085
Raean Cavener		6560 Worthington Galena Rd.	Worthington, OH 43085
Worthington Baptist Church		6777 Markwood St.	Worthington, OH 43085

6555 Worthington-Galena Rd.

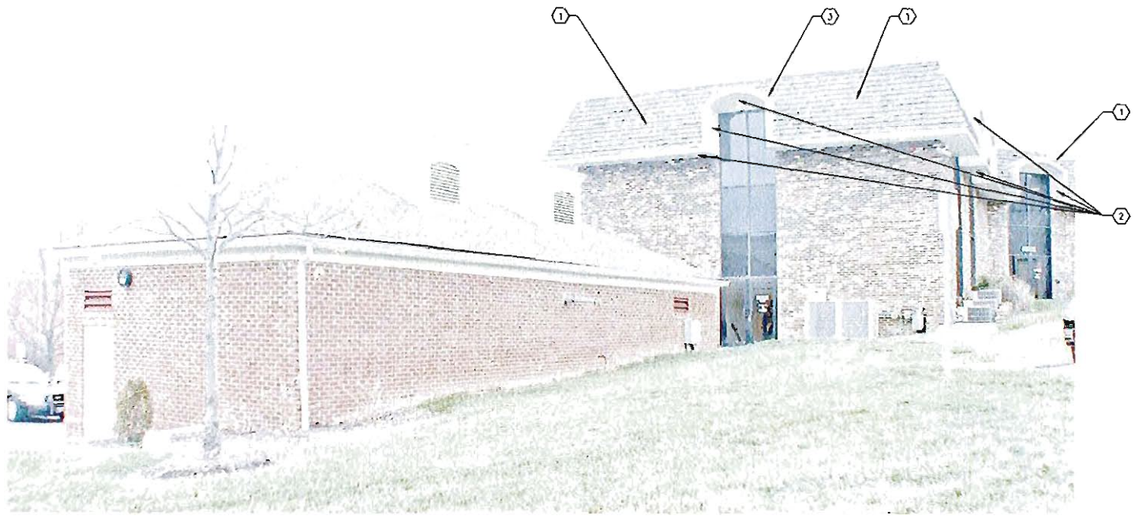

SOUTH ELEVATION 1 A-221

SCALE: NO SCALE

SOUTH ELEVATION W/ NEW FIBERGLASS SHINGLE ROOF SHOWN

GENERAL NOTES:

1. REPAINT ALL EXPOSED WOOD SURFACES INCLUDING, BUT NOT LIMITED TO, HEADERS, FASCIA, AND SOFFITS. COLOR TO MATCH EXISTING.

CODED NOTES: ⬡

1. REMOVE AND REPLACE EXISTING WOOD SHAKE ROOF WITH 50 YEAR ARCHITECTURAL FIBERGLASS SHINGLES OVER 30 LB HEAVY DUTY SHINGLE UNDERLAYMENT. COLOR FROM MANUFACTURER'S STANDARDS. REPLACE WOOD SUBSTRATE AS REQUIRED. MAINTAIN A LOG OF SHEETS REPLACED, INCLUDING NUMBER OF SHEETS AND THEIR LOCATION. ALL ROOF PENETRATIONS ARE TO BE MAINTAINED. PROVIDE NEW FLASHING AND VALLEY METAL TO MATCH EXISTING. PROVIDE FACTORY-FINISHED METAL DRIP EDGE AT ALL EXPOSED EDGES. FOLLOW MANUFACTURER'S RECOMMENDATION FOR STEEP SLOPE INSTALLATION.
2. REMOVE & REPLACE EXISTING WOOD SOFFITS AND FASCIA. BEFORE INSTALLING, PRIME ALL SURFACES OF THE LUMBER. REMOVE AND REPLACE ALL SOFFIT VENTS. PAINT TO MATCH EXISTING.
3. REMOVER AND REPLACE EXISTING SHEET METAL ROOFING. REPLACE WOOD SUBSTRATE AS REQUIRED. MAINTAIN A LOG OF SHEETS REPLACED, INCLUDING NUMBER OF SHEETS AND THEIR LOCATION. PROVIDE NEW CONT. METAL DRIP EDGE AND FLASHING.

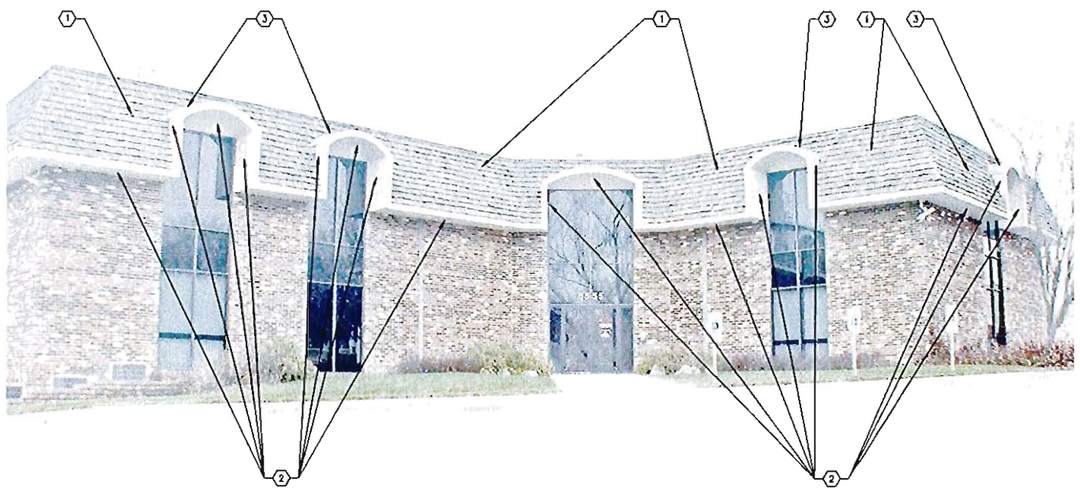

SOUTH/EAST ELEVATION 2 A-221

SCALE: NO SCALE

SOUTH/EAST ELEVATION W/ NEW FIBERGLASS SHINGLE ROOF SHOWN

CITY OF WORTHINGTON
AR 47-13
DRAWING NO.

DATE 5-31-13

DLZ

DLZ Architecture, Inc.
A subsidiary of DLZ OHIO, INC.
6121 Huntley Road
Columbus, Ohio 43229-1003
Ph.: (614) 888-0040 Fax: (614) 848-6782

WORTHINGTON OHIO

CITY OF WORTHINGTON
2013 BUILDING IMPROVEMENT PROGRAM

POLICE HEADQUARTERS
EXTERIOR ELEVATIONS

DRAWN: AJM CHK'D: AJM
DESIGNED: AJM APPRV'D: EBR
DATE: JUNE 17, 2013
SCALE:
PROJECT NUMBER 1321-7001.00

NO.	REVISION	BY	DATE

DLZ ARCHITECTURE, INC.

SHEET
OF OF
DRAWING NUMBER
A-221

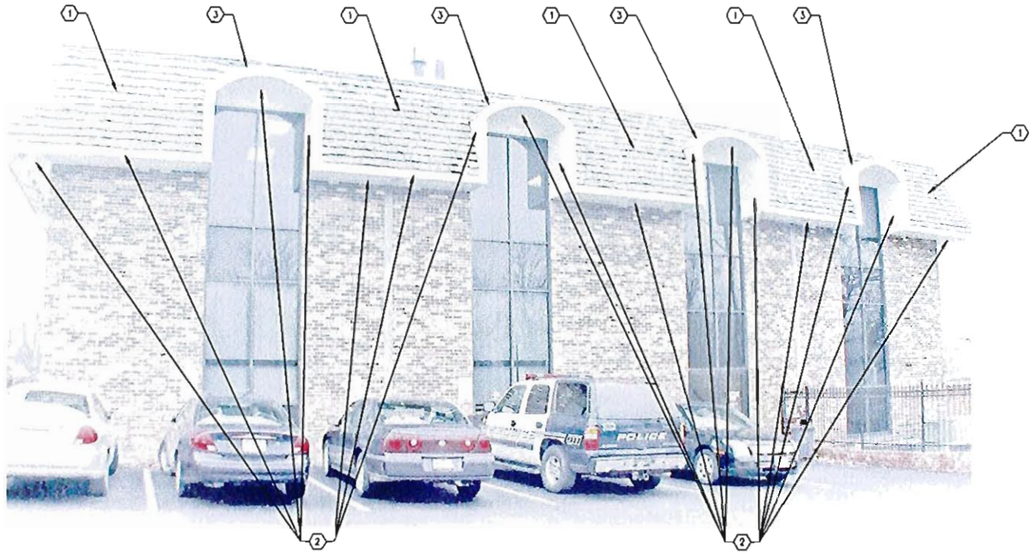

NORTH ELEVATION (1 / A-311)

SCALE: NO SCALE

NORTH ELEVATION W/ NEW FIBERGLASS SHINGLE ROOF SHOWN

GENERAL NOTES:

1. REPAINT ALL EXPOSED WOOD SURFACES INCLUDING, BUT NOT LIMITED TO, HEADERS, FASCIA, AND SOFFITS. COLOR TO MATCH EXISTING.

CODED NOTES: ⬡

1. REMOVE AND REPLACE EXISTING WOOD SHAKE ROOF WITH 50 YEAR ARCHITECTURAL FIBERGLASS SHINGLES OVER 30 LB HEAVY DUTY SHINGLE UNDERLAYMENT. COLOR FROM MANUFACTURER'S STANDARDS. REPLACE WOOD SUBSTRATE AS REQUIRED. MAINTAIN A LOG OF SHEETS REPLACED, INCLUDING NUMBER OF SHEETS AND THEIR LOCATION. ALL ROOF PENETRATIONS ARE TO BE MAINTAINED. PROVIDE NEW FLASHING AND VALLEY METAL TO MATCH EXISTING. PROVIDE FACTORY-FINISHED METAL DRIP EDGE AT ALL EXPOSED EDGES. FOLLOW MANUFACTURER'S RECOMMENDATION FOR STEEP SLOPE INSTALLATION.
2. REMOVE & REPLACE EXISTING WOOD SOFFITS AND FASCIA. BEFORE INSTALLING, PRIME ALL SURFACES OF THE LUMBER. REMOVE AND REPLACE ALL SOFFIT VENTS. PAINT TO MATCH EXISTING.
3. REMOVER AND REPLACE EXISTING SHEET METAL ROOFING. REPLACE WOOD SUBSTRATE AS REQUIRED. MAINTAIN A LOG OF SHEETS REPLACED, INCLUDING NUMBER OF SHEETS AND THEIR LOCATION. PROVIDE NEW CONT. METAL DRIP EDGE AND FLASHING.

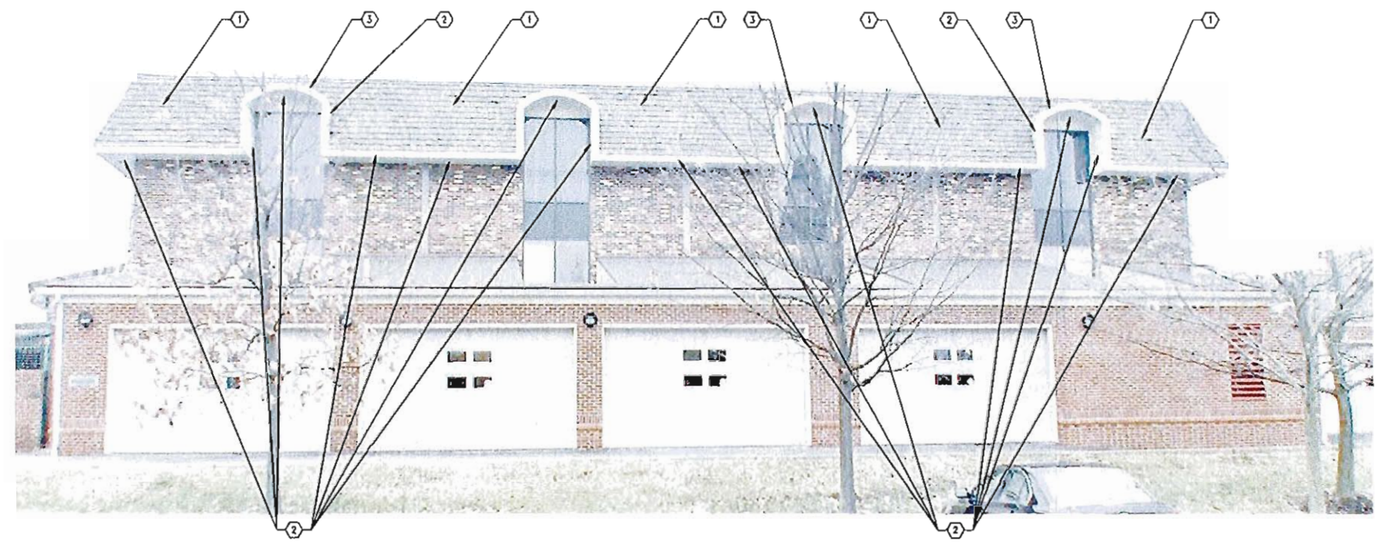

WEST ELEVATION (2 / A-311)

SCALE: NO SCALE

WEST ELEVATION W/ NEW FIBERGLASS SHINGLE ROOF SHOWN

CITY OF WORTHINGTON
DRAWING NO. AR47-13
DATE 5-31-13

DLZ

DLZ Architecture, Inc.
A subsidiary of DLZ OHIO, INC.
6121 Huntley Road
Columbus, Ohio 43229-1003
Ph.: (614) 888-0040 Fax: (614) 848-6711

WORTHINGTON OHIO

CITY OF WORTHINGTON
2013 BUILDING IMPROVEMENT PROGRAM

POLICE HEADQUARTERS
EXTERIOR ELEVATIONS

DRAWN: AJM CHK'D. AJM
DESIGNED: AJM APPRV'D: EBR
DATE: JUNE 17, 2013
SCALE:
PROJECT NUMBER 1321-7001.00

NO.	REVISION	BY	DATE

DLZ ARCHITECTURE, INC.

SHEET
OF OF
DRAWING NUMBER
A-222

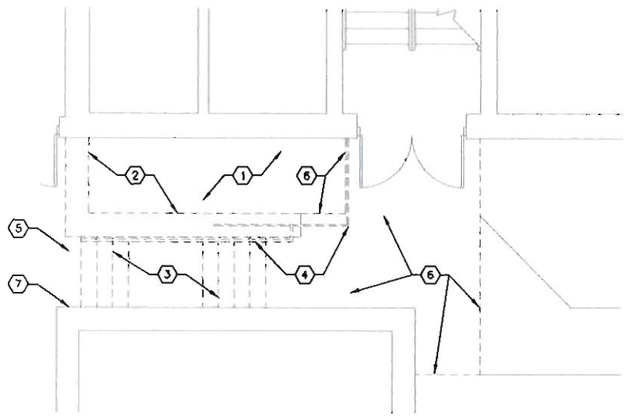

DEMOLITION PLAN

SCALE: 1/4" = 1'-0"

3 / A-211

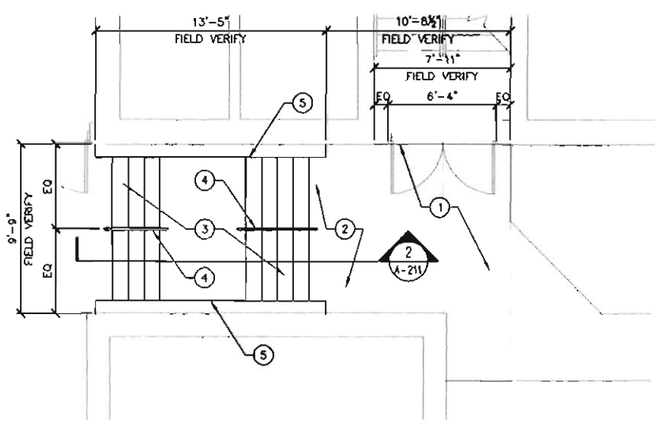

NEW WORK PLAN

SCALE: 1/4" = 1'-0"

1 / A-211

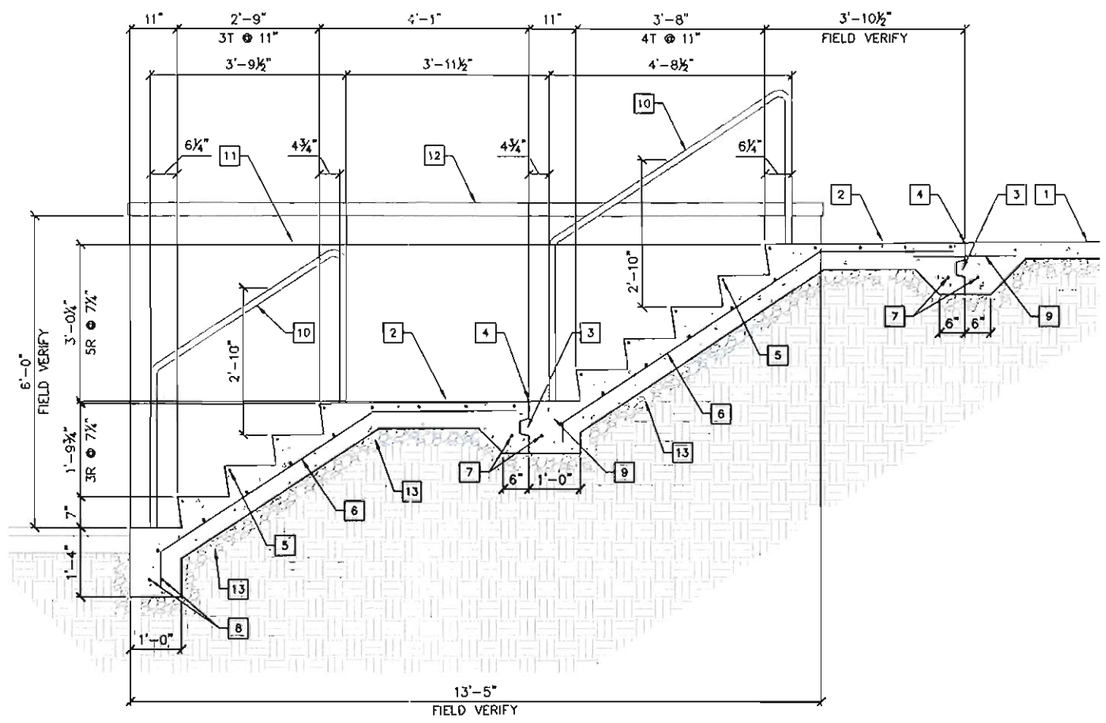

SECTION

SCALE: 3/4" = 1'-0"

2 / A-211

GENERAL NOTES:

1. ONCE THE EXISTING STAIRS AND PLANTER HAVE BEEN REMOVED, CONTRACTOR SHALL VERIFY IF EXISTING BRICK VENEER EXTENDS DOWN TO LOWER LEVEL GRADE. IF BRICK DOES EXTEND DOWN TO LOWER LEVEL GRADE THEN ALTERNATE #1 WILL NOT BE IMPLEMENTED AND CONTRACTOR SHALL THOROUGHLY CLEAN EXISTING BRICK VENEER AND MORTAR JOINTS THAT WILL BE EXPOSED.
2. TOP SURFACE OF NEW CONCRETE SIDEWALK AND STEPS SHALL BE SLOPED A MINIMUM OF 1/16" PER FOOT.
3. CONTRACTOR SHALL VERIFY EXISTING FINISH GRADES AT THE LOWER LEVEL AND 1ST FLOOR LEVEL PRIOR TO FORMING FOR STEPS.

CODED NOTES – DEMOLITION PLAN: ⬡

1. REMOVE EXISTING LANDSCAPING.
2. REMOVE EXISTING RETAINING WALL.
3. REMOVE EXISTING CONCRETE STEPS.
4. REMOVE EXISTING RAILING AND HANDRAIL.
5. REMOVE EXISTING CONCRETE APRON.
6. REMOVE EXISTING CONCRETE SIDEWALK TO THE EXTENT INDICATED.
7. REMOVE EXISTING BRICK EXTRUSION IN AREA WHERE LANDSCAPE WALL IS TO BE CONSTRUCTED (ALTERNATE #1)

CODED NOTES – NEW WORK PLAN: ◯

1. NEW 4" CONCRETE SIDEWALK. HOLD TOP OF SIDEWALK DOWN ½" FROM CONCRETE FLOOR SLAB. PROVIDE 18" #4 DOWELS AT 24" O.C. BETWEEN NEW SIDEWALK AND EXISTING CONSTRUCTION. EPOXY DOWELS INTO EXISTING CONSTRUCTION.
2. NEW 6" CONCRETE SIDEWALK. HOLD TOP OF SIDEWALK DOWN ½" FROM CONCRETE FLOOR SLAB. PROVIDE 18" #4 DOWELS AT 24" O.C. BETWEEN NEW SIDEWALK AND EXISTING CONSTRUCTION. EPOXY DOWELS INTO EXISTING CONSTRUCTION.
3. NEW CONCRETE STEPS.
4. NEW 1½"ø GALV. STEEL HANDRAIL. PAINTED, COLOR TO BE SELECTED BY ARCHITECT.
5. NEW LANDSCAPE WALL INSTALLED FLUSH WITH EXISTING CONSTRUCTION. WALL SHALL BE ANCHORED TO EXISTING WALL W/ MASONRY ANCHORS. PROVIDE THROUGH-WALL FLASHING BELOW TOP CAP INTO EXISTING MORTAR JOINT. CAULK JUNCTURE BETWEEN EXISTING CONSTRUCTION AND LANDSCAPE WALL. (ALTERNATE #1)

CODED NOTES – SECTIONS: □

1. NEW 4" CONCRETE SIDEWALK. HOLD TOP OF SIDEWALK DOWN ½" FROM CONCRETE FLOOR SLAB. PROVIDE 18" #4 DOWELS AT 24" O.C. BETWEEN NEW SIDEWALK AND EXISTING CONSTRUCTION. EPOXY DOWELS INTO EXISTING CONSTRUCTION.
2. NEW 6" CONCRETE SIDEWALK. HOLD TOP OF SIDEWALK DOWN ½" FROM CONCRETE FLOOR SLAB. PROVIDE 18" #4 DOWELS AT 24" O.C. BETWEEN NEW SIDEWALK AND EXISTING CONSTRUCTION. EPOXY DOWELS INTO EXISTING CONSTRUCTION.
3. 2 X 4 KEYWAY.
4. CONSTRUCTION JOINT.
5. #3 NOSING BAR (TYP.).
6. #4 AT 12" O.C. EACH WAY.
7. (2) #4 CONT.
8. (2) #5 CONT.
9. 24" #4 DOWEL AT 24" O.C.
10. NEW 1½"ø GALV. STEEL HANDRAIL. PAINTED, COLOR TO BE SELECTED BY ARCHITECT.
11. NEW LANDSCAPE WALL INSTALLED FLUSH WITH EXISTING CONSTRUCTION. WALL SHALL BE ANCHORED TO EXISTING WALL W/ MASONRY ANCHORS. PROVIDE THROUGH-WALL FLASHING BELOW TOP CAP INTO EXISTING MORTAR JOINT. CAULK JUNCTURE BETWEEN EXISTING CONSTRUCTION AND LANDSCAPE WALL. (ALTERNATE #1)
12. LANDSCAPE WALL TOP CAP. CAULK JUNCTURE BETWEEN EXISTING CONSTRUCTION AND LANDSCAPE WALL TOP CAP. (ALTERNATE #1)
13. 6" GRAVEL BASE OVER COMPACTED EARTH.

CITY OF WORTHINGTON
AR 47-13
DRAWING NO.

DATE 5-31-13

DLZ

DLZ Architecture, Inc.
A subsidiary of DLZ OHIO, INC.
6121 Huntley Road
Columbus, Ohio 43229-1003
Ph.: (614) 888-0040 Fax: (614) 848-6712

WORTHINGTON OHIO

CITY OF WORTHINGTON
2013 BUILDING IMPROVEMENT PROGRAM

POLICE HEADQUARTERS
PLANS & DETAILS

DRAWN: LMB CHK'D. –
DESIGNED: CDM APPRV'D: –
DATE: JUNE 17, 2013
SCALE:

PROJECT NUMBER
1321-7001.00

NO.	REVISION	BY	DATE
△			
△			
△			
△			
△			
△			
△			

DLZ ARCHITECTURE, INC.

SHEET
OF OF

DRAWING NUMBER
A-211