City of Worthington

ARCHITECTURAL REVIEW BOARD

Certificate of Appropriateness
Application

AR
Case # 105-12
Date Received 10-1-12
Fee 30.00
Meeting Date 10-11-12
Filing Deadline 9-28
Receipt #

1. **Property Location** 7227 N. HIGH ST., SUITE 05 Naticakes
2. **Present/Proposed Use** RESTAURANT
3. **Zoning District** C-2Y

RECEIVED OCT 01 2012

4. **Applicant** CARTER BEAN, J. CARTER BEAN ARCHITECT LLC

   Address 4400 N. HIGH ST., STE. 401, COLUMBUS, OH 43214

   Phone Number(s) 614·262·2326
5. **Property Owner** WORTHINGTON SQUARE VENTURES LLC

   Address 100 THROCKMORTON ST., #700, FORT WORTH, TX 76102

   Phone Number(s)
6. **Project Description** NEW RESTAURANT CONSTRUCTION, INCLUDING STOREFRONT CONSTRUCTION, AWNING, AND SIGNAGE
7. **Project Details:**

   a) **Design** SEE DRAWINGS

   b) **Color** SEE DRAWINGS

   c) **Size** SEE DRAWINGS

   d) **Approximate Cost** $30,000 (STOREFRONT, AWNINGS & SIGNAGE) **Expected Completion Date** DEC. 1, 2012

PLEASE READ THE FOLLOWING STATEMENTAND SIGN YOUR NAME:
The information contained in this application and in all attachments is true and correct to the best of my knowledge. I further acknowledge that I have familiarized myself with all applicable sections of the Worthington Codified Ordinances and will comply with all applicable regulations.

CARTER BEAN
Applicant (Signature)

9.28.12
Date

Property Owner (Signature)

9.28.12
Date

Abutting Property Owners List for
7227 N. High St.

BP		7141 N. High St.	Worthington, OH 43085
Englefield Oil Co.	John S. Gordon	447 James Parkway	Heath, OH 43056
He Hari Inc.		7007 N. High St.	Worthington, OH 43085
Tsai & Chan LLC		40 Northwoods Blvd.	Columbus, OH 43235
Buca Di Beppo		60 E. Wilson Bridge Rd.	Worthington, OH 43085
Chase Bank		50 W. Wilson Bridge Rd.	Worthington, OH 43085
Telhio Credit Union		54 W. Wilson Bridge Rd.	Worthington, OH 43085
COSI		7166 N. High St.	Worthington, OH 43085
T-Mobile		7170 N. High St.	Worthington, OH 43085
Jimmy John's		7172 N. High St.	Worthington, OH 43085
Starbucks Coffee Co.		7176 N. High St.	Worthington, OH 43085
ImmediaDent		7174 N. High St.	Worthington, OH 43085
Continental Properties		150 E. Broad St., Ste. 800	Columbus, OH 43215
Park National Bank		7100 N. High St.	Worthington, OH 43085
The Kroger Co.		4111 Executive Parkway	Westerville, OH 43081
Eleanor Popper		539 Old Farm Rd.	Columbus, OH 43213
Kroger		60 Worthington Mall	Worthington, OH 43085
Paradigm Properties		2600 Corporate Exchange #175	Columbus, OH 43231
Ohio Automobile Club		90 E. Wilson Bridge Rd.	Worthington, OH 43085
McDonalds Corporation		P.O. Box 182571	Columbus, OH 43218
McDonalds		80 E. Wilson Bridge Rd.	Worthington, OH 43085
Insight Bank	Harvey Glick	150 W. Wilson Bridge Rd.	Worthington, OH 43085
Corporate Hill LLC		470 Old Worthington Rd.	Westerville, OH 43082

7227 N. High St.

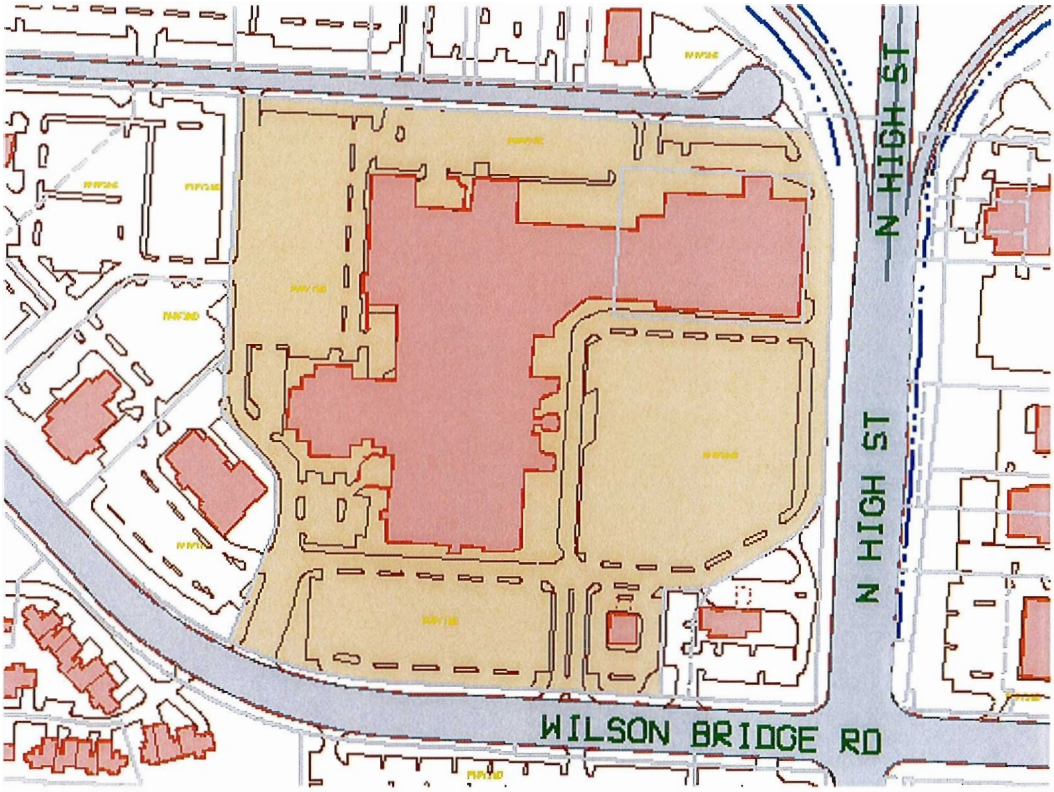

100-006600-00 09/30/2010

CITY OF WORTHINGTON
AR 105-12
DRAWING NO.

DATE 10-1-12

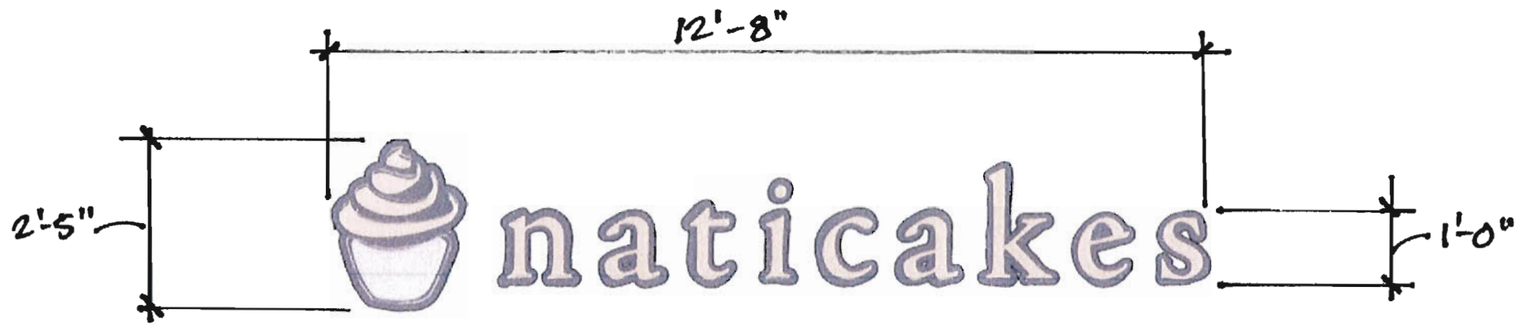

CLIENT: Pies & Pints	
DATE: 9-28-12	
DRAWING#	
PROJECT LOCATION: Exterior Signage	
SALESPERSON:	
DESIGNER:	
SPECS:	
see details	

Internally LED Illuminated Channel Letters and Channel Logo's

BACKS: 0.040" aluminum
RETURNS/SIDES: Letters - 0.040" aluminum X 5" deep, finished Black.
FACES: 1/8" thick acrylic faces with PSV Graphics. 1" Black trimcaps
ILLUMINATION: White LED units as req'd. for proper illumination.
MOUNTING: Letters to be mounted flush to fascia.

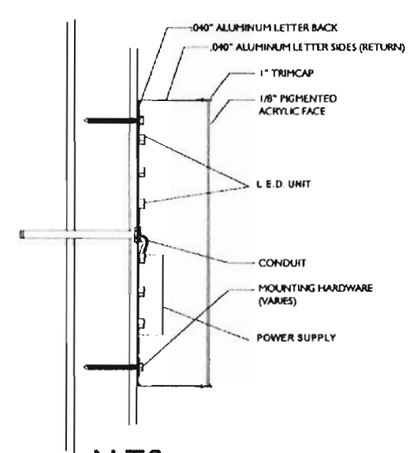

N.T.S.

This Sign is intended to be installed in accordance of article 600 of the National electrical Code and or other applicable local codes. This includes proper grounding and bonding of the sign

CITY OF WORTHINGTON
AR 105-12
DRAWING NO.

DATE 10-1-12

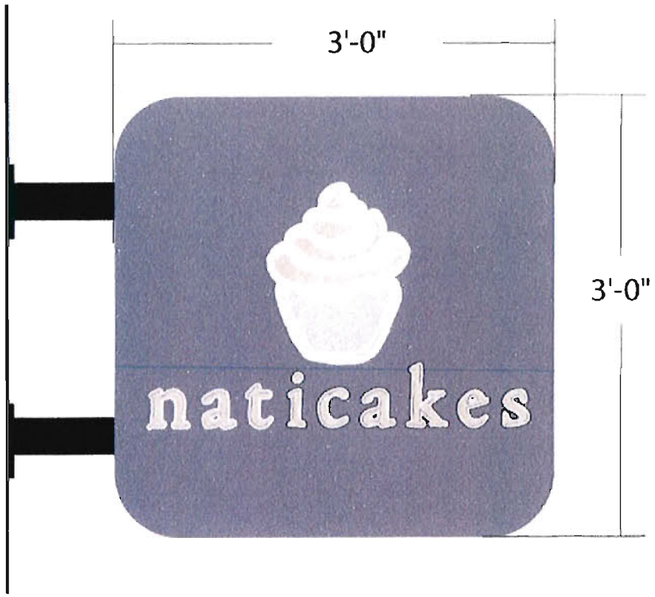

Internally LED Illuminated Projecting Wall Sign

CHANNEL LETTERS
CABINET: Custom fabricated aluminum sign cabinet 5" deep.
FACES: Aluminum faces routed out and backed with white polycarbonate faces. Faces to have PSV graphics applied first surface.
ILLUMINATION: White LED units as req'd. for proper illumination.
MOUNTING: Cabinet to be mounted to existing brick fascia with (2) 3" steel support tubes.

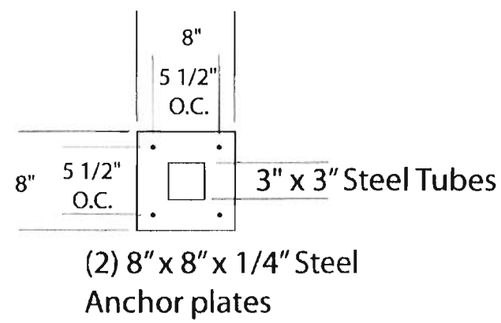

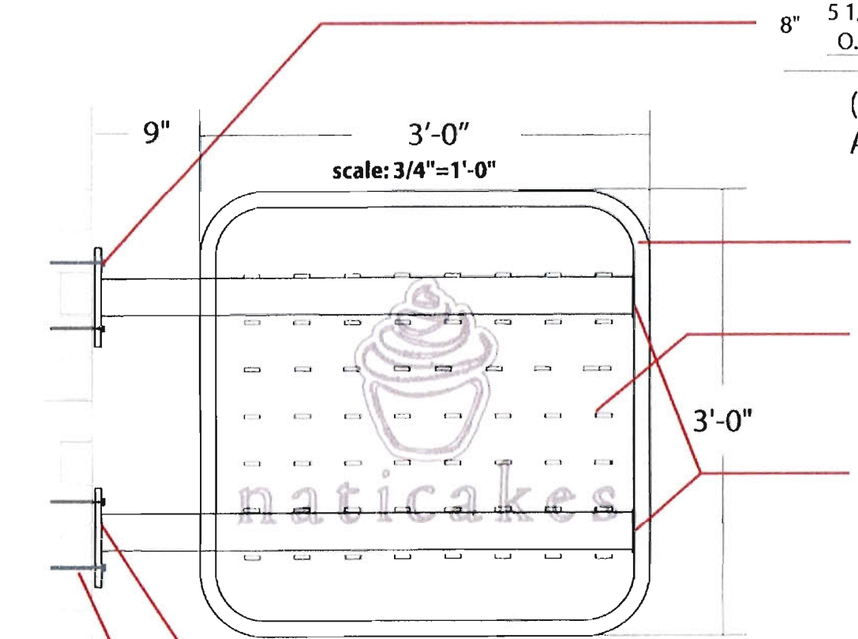

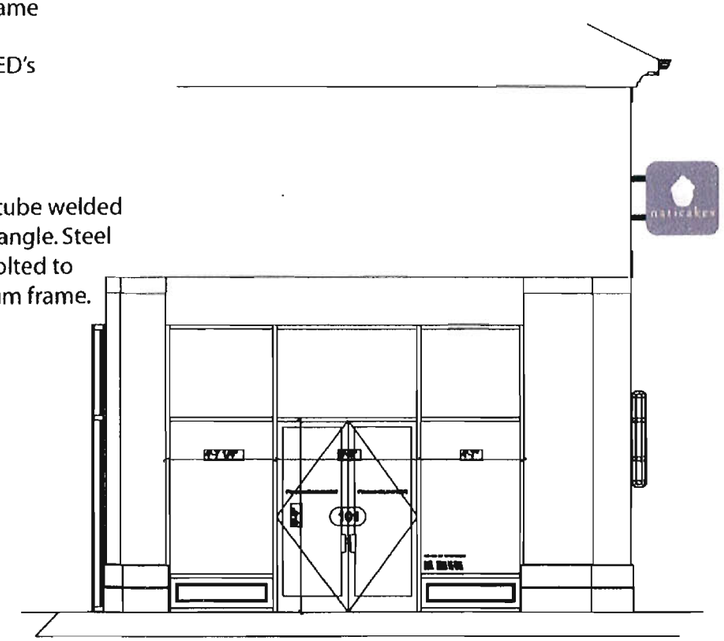

CLIENT: Naticakes	
DATE: 8-27-12	
DRAWING#	
PROJECT LOCATION: Worthington Mall	
SALESPERSON:	
DESIGNER:	
SPECS:	
Exterior Signage	
see details	

This Sign is intended to be installed in accordance of article 600 of the National electrical Code and or other applicable local codes. This includes proper grounding and bonding of the sign

CITY OF WORTHINGTON
AR 105-12
DRAWING NO.
DATE 10-1-12