City of Worthington

ARCHITECTURAL REVIEW BOARD

Certificate of Appropriateness
Application

Case # AR 60-15
Date Received 7-10-15
Fee —
Meeting Date 7-23-15
Filing Deadline _____
Receipt # _____

1. **Property Location** 752 HIGH STREET, WORTHINGTON 43085
2. **Present/Proposed Use** PRESENT: VACANT; PROPOSED: COMMERCIAL/RETAIL
3. **Zoning District** C-5 (CENTRAL COMMERCIAL)
4. **Applicant** WORTHINGTON COMMUNITY IMPROVEMENT CORP.

   Address 6550 N. HIGH ST., WORTHINGTON 43085

   Phone Number(s) (614) 436-3100
5. **Property Owner** CITY OF WORTHINGTON

   Address 6550 NORTH HIGH ST., WORTHINGTON, OH 43085

   Phone Number(s) (614) 436-3100
6. **Project Description** EXTERIOR CHANGE TO KILBOURNE BUILDING RELATED TO CURRENT COMMON AREA RENOVATIONS: EXTERIOR LIGHTS Above main entrance
7. **Project Details:**

   a) **Design** Emergency Lights - Cooper Lighting - Sure-Lites Recessed into ceiling

   b) **Color** _____

   c) **Size** _____

   d) **Approximate Cost** _____ **Expected Completion Date** SEPT., 2015

PLEASE READ THE FOLLOWING STATEMENTAND SIGN YOUR NAME:
The information contained in this application and in all attachments is true and correct to the best of my knowledge. I further acknowledge that I have familiarized myself with all applicable sections of the Worthington Codified Ordinances and will comply with all applicable regulations.

BY: [signature] FOR BONNIE MICHAEL, CHAIR PER PHONE AUTHORIZATION — JULY 10, 2015
Applicant (Signature) — Date
WORTHINGTON COMMUNITY IMPROVEMENT CORP.

BY: [signature] — JULY 10, 2015
Property Owner (Signature) — Date
CITY OF WORTHINGTON

ABUTTING PROPERTY OWNERS
FOR
752 High St.

Huntington National Bank		800 High St.	Worthington, OH 43085
Worthington Board of Education	Attn: Tim Gehring	200 E. Wilson Bridge Rd.	Worthington, OH 43085
St. Johns Church		700 High St.	Worthington, OH 43085
John & Ursula Schroeder		721 High St.	Worthington, OH 43085
Christine Lahue		28 W. Dublin-Granville Rd.	Worthington, OH 43085
Worthington Presbyterian Church		775 High St.	Worthington, OH 43085

752 High St.

100-006616 04/10/2014

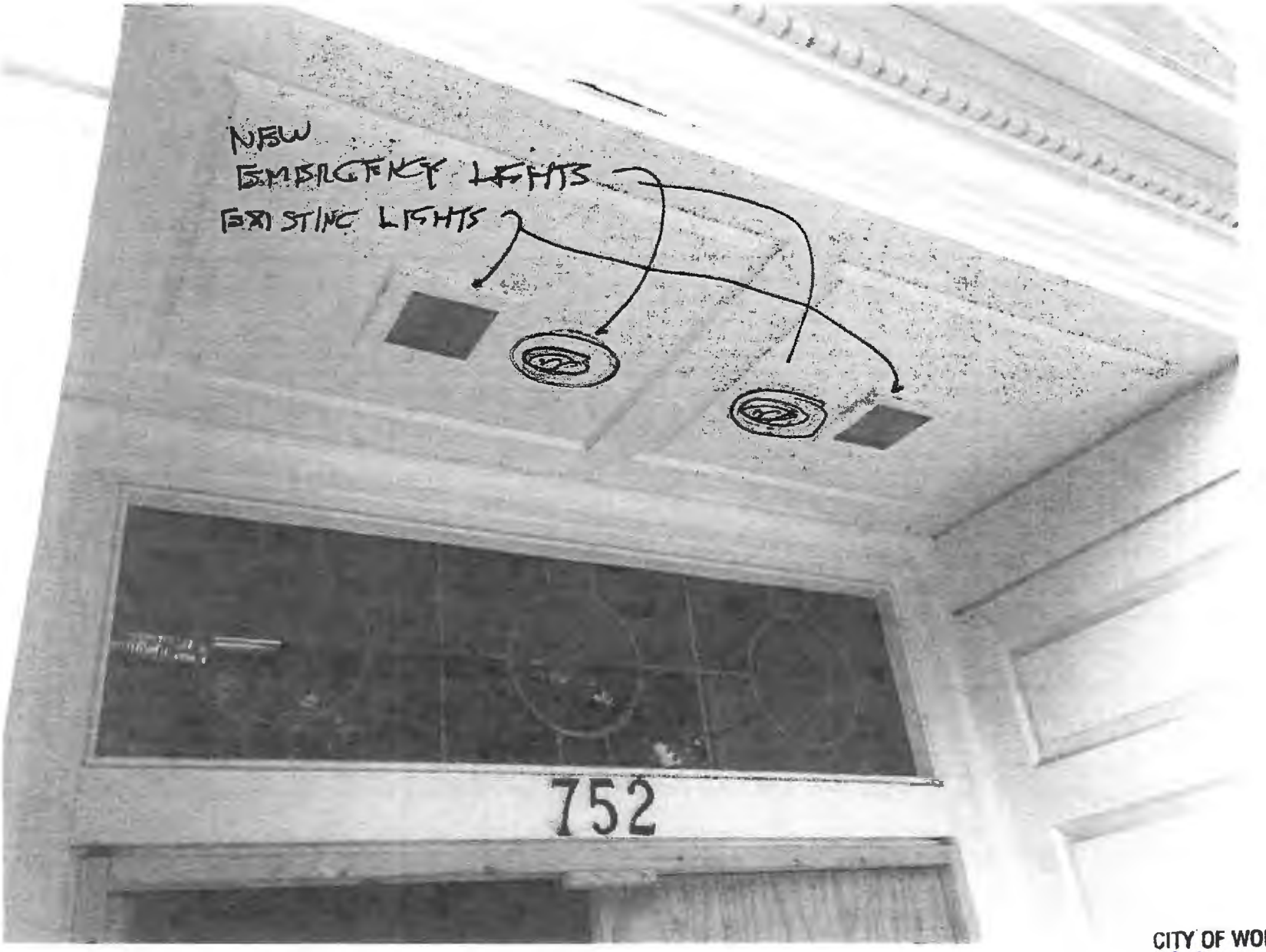

CITY OF WORTHINGTON
AR 60-15
DRAWING NO.

DATE 7-10-15

COOPER LIGHTING - SURE-LITES®

		Type
Catalog #		
Project		
Comments		Date
Prepared by		

SPECIFICATION FEATURES

Electrical
- 6V or 12V DC Input Voltage

Construction
- Matches RG1 Series emergency lighting units
- 20-gauge die-stamped steel housing with white baked enamel finish
- Housing adjusts in plaster frame 1 3/8" to accommodate different ceiling thicknes
- Bar hangers included for fast, easy installation
- Gimbal trim ring has white paint finish
- Lamp adjusts 40° from vertical with 358° rotation

Code Compliance
- UL Listed
- UL Damp Location Listed
- Life Safety NFPA 101

Warranty
- Unit: 1-year

Lamp Data
- 6 Volt Incandescent Sealed Beam
- 12 Volt Incandescent Sealed Beam
- Consult factory for other lamp types.

GFR
SERIES

ROUND SPECIALTY REMOTES

EMERGENCY LIGHTING

TOTALLY PREDICTABLE RELIABILITY

CITY OF WORTHINGTON
AR 60-15
DRAWING NO.

DATE 7-10-15

ORDERING INFORMATION

GFR Series

Catalog No.	Finish	Lamp Type	Volts	Watts	Lamp No.	Isofootcandle Diagram No.
GFR2703	White Trim	Incandescent Sealed Beam	6	8	029-03	3
GFR2716	White Trim	Halogen Sealed Beam	12	8	029-16	6

Alternate Lamps: Consult Cooper Lighting Representative
Other Finishes Available: Cooper Lighting Representative

ENERGY DATA

Power Consumption
Is equal to lamp wattage.

ELRG Emergency Recessed Gimbal

SPECIFICATIONS

ELECTRICAL

Primary Circuit

Supply voltage	AC input watts	Max. amps	VA
120	5.8	.052	6.2
277	5.9	.023	6.4

BATTERY

Sealed Lead-Calcium

Voltage	Shelf life[1]	Typical life[1]	Maintenance[2]	Optimum temperature[3]
6	12 Months	5–7 years	none	60° - 90°F (16° - 32°C)

Notes

1 At 77°F (25°C).

2 All life safety equipment, including emergency lighting for path of egress must be maintained, serviced, and tested in accordance with all National Fire Protection Association (NFPA) and local codes. Failure to perform the required maintenance, service, or testing could jeopardize the safety of occupants and will void all warranties.

3 Optimum ambient temperature range where unit will provide capacity for 90 minutes. Higher and lower temperatures affect life and capacity. Consult factory for detailed information.

DIMENSIONS

All dimensions are inches (centimeters).

Weight: 6.5 lbs (3 kgs)

Ceiling opening dia.: 6 (15.2)

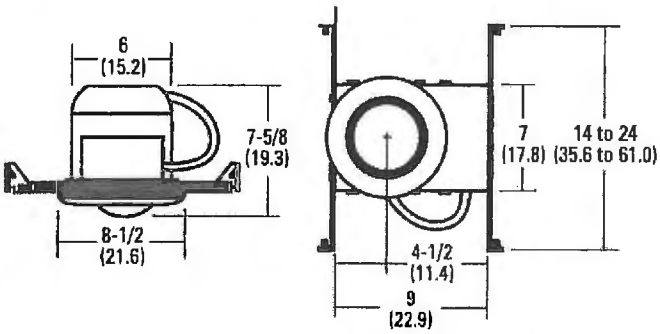

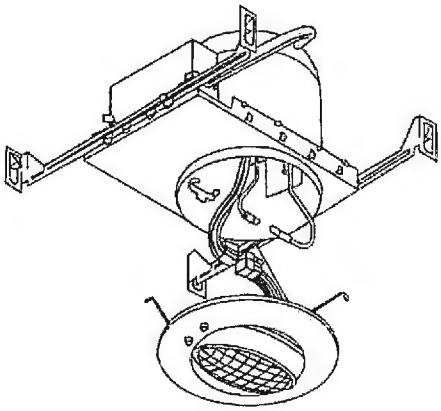

PHOTOMETRICS

ELRG
6-volts, 8 watts, halogen

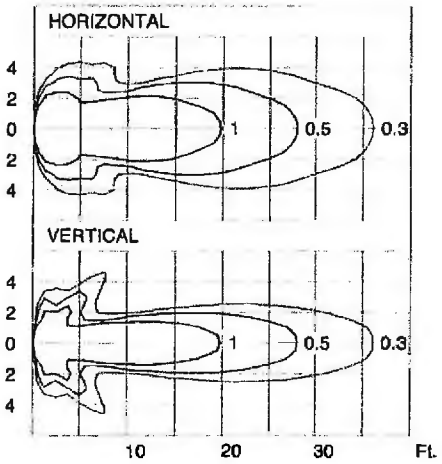

Replacement Lamp # 785

CITY OF WORTHINGTON
AR 60-15
DRAWING NO.
ATE 7-10-15

EMERGENCY: One Lithonia Way, Conyers, GA 30012 Phone: 800-334-8694 Fax: 770-981-8141 www.lithonia.com

© 1997-2015 Acuity Brands Lighting, Inc. All rights reserved. Rev. 07/07/15