RECEIVED APR 11 2014

City of Worthington

ARCHITECTURAL REVIEW BOARD

Certificate of Appropriateness
Application

Case # AR 14-14
Date Received 4-11-14
Fee $200
Meeting Date 4-24-14
Filing Deadline
Receipt # 58108

1. **Property Location** 933 High Street
2. **Present/Proposed Use** Office / Grocery
3. **Zoning District** C-3 / PUD
4. **Applicant** InSite Real Estate, LLC

   Address 1400 16th Street, Suite 300, Oak Brook, IL 60523

   Phone Number(s) 630-617-9115
5. **Property Owner** Integration Resources, Inc.

   Address 2939 Kenny Road, Suite 200, Columbus, OH 43221

   Phone Number(s) 614-442-2431 ext. 104
6. **Project Description** Demolition of the existing 40,000 SF office complex and construction of a 30,000 SF Fresh Thyme Farmer's Market grocery store, parking lot and associated site improvements
7. **Project Details:**

   a) **Design** Brick and stone facade, with faux second story and four sided architecture

   b) **Color** Red brick with earth toned stone watertable, green standing seam metal awnings

   c) **Size** Approximatley 30,000 SF

   d) **Approximate Cost** $4,000,000 **Expected Completion Date** Spring 2015

PLEASE READ THE FOLLOWING STATEMENTAND SIGN YOUR NAME:
The information contained in this application and in all attachments is true and correct to the best of my knowledge. I further acknowledge that I have familiarized myself with all applicable sections of the Worthington Codified Ordinances and will comply with all applicable regulations.

Applicant (Signature) — Date 4/10/14

Property Owner (Signature) — Date 4/8/14

Abutting Property Owners List for
933 High St.

Samuel & Sharon Speck		240 Greenbrier Ct.	Worthington, OH 43085
Adam & Heather Tomlinson		260 Greenbrier Ct.	Worthington, OH 43085
Robert & Julie Weber		300 Greenbrier Ct.	Worthington, OH 43085
Capital Appraisal Ltd.		937 High St., Suite 200	Worthington, OH 43085
An-Jak Properties LLC		1001 High St.	Worthington, OH 43085
Donald Shaw		979 High St.	Worthington, OH 43085
Sherrie Ireland		951 High St. Lower Level	Worthington, OH 43085
Media Mouse Ink Art & Design Co.		951-B High St.	Worthington, OH 43085
Ivory Tower Investments LLC		951-C High St.	Worthington, OH 43085
High-Wilson LLC		2227 Ashbury Close	Powell, OH 43065
Dr. Anthony Lordo, DDS		1000 High St.	Worthington, OH 43085
Toll Gate Condominium Assoc.	Cindy Mild	PO Box 287	Lewis Center, OH 43035
Worthington Historical Society		50 W. New England Ave.	Worthington, OH 43085
CVS		1 CVS Dr.	Woonsocket, RI 02895
FedEx Kinkos		940 high St.	Worthington, OH 43085
Schreiner's Ace Hardware		926 High St.	Worthington, OH 43085
DQ Properties	Sandra	920 High St.	Worthington, OH 43085
DQ Properties		1505 S. James Rd.	Columbus, OH 43227
WSL, LLC		923 High St.	Worthington, OH 43085
Resident		20 W. North St.	Worthington, OH 43085
Carolyn Porter		3170 Carisbrrok Rd.	Columbus, OH 43221
Resident		30 W. North St.	Worthington, OH 43085
Brooks Family Investments LLC		40 W. North St.	Worthington, OH 43085
Bryan Chauvin		46 W. North St.	Worthington, OH 43085
Jason S. Bradley-Krauss		844 Oxford St.	Worthington, OH 43085
Resident		52 W. North St.	Worthington, OH 43085
William & Glenna Brown		60 W. North St.	Worthington, OH 43085
Charles & Ellen Baldwin		68 W. North St.	Worthington, OH 43085
Raymond & Nancy Gant		70 W. North St.	Worthington, OH 43085
Walter & Constance Kobalka		674 Hartford St.	Worthington, OH 43085
Michael & Joy Scholl		41 W. North St.	Worthington, OH 43085
Ronald Overstreet		6851 Highland Pl.	Worthington, OH 43085
Greg & Mary Offenburger		267 Greenbrier Ct.	Worthington, OH 43085

InSite

InSite Real Estate, LLC
1400 16th Street, Suite 300 | Oak Brook, IL 60523-8854
t: 630-617-9100 | f: 630-617-9120 | www.insiterealestate.com

April 10, 2014

TO: Mr. Lee Brown
Director; Planning and Building
City of Worthington
374 Highland Avenue
Worthington, OH 43085

FROM: InSite Real Estate, LLC

SUBJECT: Proposed Fresh Thyme Farmer's Market – Preliminary PUD Application Submittal/ARB Application Submittal

RE: Project Summary / Narrative Letter

Mr. Brown:

InSite Real Estate, LLC is applying for Preliminary PUD and Architectural Review Board review by the City of Worthington for the proposed rezoning and development of the existing site at 933 High Street in Worthington as a Fresh Thyme Farmer's Market Grocery Store.

Rezoning

InSite Real Estate, LLC would propose the rezoning and consolidation of the existing parcels at 933 High Street from C-3 to PUD. The subject site is located in the Old Worthington High Street Transition District of the Comprehensive Plan & 2005 Strategic Plan for Worthington and would comply with the recommendations for this district.

Site Plan

InSite Real Estate, LLC would propose the development of a 30,000 SF, free standing Fresh Thyme Farmer's Market Grocery store, parking lot, and associated site improvements. The development of the facility would involve the relocation of a two existing stormwater lines that currently run through the subject site.

Access

The proposed 30,000 SF building and associated parking lot would access High Street via a single re-aligned access point running east to west along the north side of the subject site and proposed building for vehicle traffic. Pedestrian access to high street would utilize sidewalks on both the north and south sides of the building in addition to bike racks/parking on both the east and west sides of the building. Delivery Truck and service vehicles will access the site using the same access point and access the budging using an interior loading area in the southwest corner of the building.

Utilities

The development would proposed to be serviced by the existing City of Worthington water and sewer lines on site. The existing 15" sanitary sewer running along the south property line through the site would be tapped to serve the proposed building. A 6" sanitary sewer service, 2" domestic water service and 6" fire line service would

InSite

InSite Real Estate, LLC
1400 16th Street, Suite 300 | Oak Brook, IL 60523-8854
t: 630-617-9100 | f: 630-617-9120 | www.insiterealestate.com

be necessary to accommodate the building. Electric service would be provided by American Electric Power and gas service would be provided by Columbia Gas of Ohio.

Outdoor Patio Area

The development would propose the construction of a pedestrian-friendly corridor and outdoor patio/seating area along high street between the proposed building and High Street curb line. This corridor and patio area would include a public seating and dining area, decorative planters, bicycle racks, decorative waste receptacles and decorative pedestrian lighting.

Architecture

Structure

The proposed building will be an approximately 30,000 SF facility supported by continuous, shallow foundations, load bearing exterior masonry walls, interior columns and a slab on grade concrete floor. The load bearing walls will extend to parapets above the flat roof and screen all mechanical units located on the roof.

Façade

The façade will consist of architectural brick units and stone veneer on all four sides of the building. Faux windows will be installed on the south, east and west elevations to present the look of a two story building. Clear vision windows will be installed on the west side of the building to allow visibility into the space. Metal awnings will be installed above window locations.

Loading Area

An interior loading and trash area will be located in the southwest corner of the building and will be concealed by commercial grade overhead roll up doors

Please let me know if you have any questions or need any additional information.

Sincerely,

Patrick Sauerland
Project Manager

RECEIVED APR 11 2014

City of Worthington

PLANNED UNIT DEVELOPMENT
PRELIMINARY PLAN APPLICATION

Case # PUD 02-14
Date Received 4-11-14
Fee $425
Meeting Date 4-24-14
Filing Deadline
Rcpt# 58109

1. Property Location 933 High Street
2. Present Zoning C-3 Present Use Office
3. Proposed Use PUD Grocery
4. Applicant InSite Real Estate, LLC

   Address 1400 16th Street, Suite 300, Oak Brook, IL 60523

   Home Phone 630-617-9100 Work Phone 630-617-9115
5. Property Owner Integration Resources, Inc.

   Address 2939 Kenny Road, Suite 200, Columbus, OH 43221

   Home Phone Work Phone 614-442-2431 ext. 104
6. Project Description Demolition of the existing 40,000 SF office complex and construction of a 30,000 SF Fresh Thyme Farmer's Market grocery store, parking lot and associated site improvements

PLEASE READ THE FOLLOWING STATEMENT AND SIGN YOUR NAME:

The information contained in this application and in all attachments is true and correct to the best of my knowledge. I further acknowledge that I have familiarized myself with all applicable sections of the Worthington Codified Ordinances and will comply with all applicable regulations.

Applicant (Signature) Date 4/10/14

Nicholas C Bowland
Property Owner (Signature) Date 4/3/14

933 High St.

100-000993-00 11/22/2010

4/10/2014

Development Plan

INTRODUCTION-The subject property is located at 933 High Street, Worthington, Franklin County, OH 43085. The parcel numbers are 100-000993, 100-000537 and 100-002460. The purpose of the application is to rezone the existing lot to classification PUD for the purpose of the redevelopment of the site. The property contains 2.6504 acres zoned "C-3" Institutions and Offices. The existing site consists of two (2), two (2) story office buildings consisting of approximately 40,000 sq. ft. (total) that were constructed in 1971.

The proposal for redevelopment of the site includes rezoning and consolidation of the existing parcels at 933 High Street from C-3 to PUD and demolition of the existing office buildings on site. Upon completion of demolition of the existing structures, a 30,000 SF, free standing Fresh Thyme Farmer's Market Grocery store, parking lot, and associated site improvements would be constructed.

1. Proposed Uses:
    a. Grocery and Office Uses under section 1147.01 C-3 Institutions and Offices of the Codified Ordinances
        i. 30,000 SF building footprint with ±28,000 SF grocery retail area and ±2,000 SF interior loading and trash management area.
        ii. A variance from section 1174.03(f) of Ordinance No. 04-2103 will be required to allow the facility to be 30,000 SF.

2. Design Regulations
    a. Character
        i. The subject site is located in the Old Worthington High Street Transition District of the Comprehensive Plan & 2005 Strategic Plan for Worthington and would comply with the recommendations for this district. The building will be located adjacent to High street with the parking facilities behind the building to encourage pedestrian accessibility.
    b. Design
        i. The façade will consist of architectural brick units and stone veneer on all four sides of the building. Faux windows will be installed on the south, east and west elevations to present the look of a two story building. Clear vision windows will be installed on the west side of the building to allow visibility into the space. Metal awnings will be installed above window locations.
        ii. The Grocery Store building shall be in substantial compliance with the building elevations attached as Exhibit "B."
        iii. The proposed 30,000-square foot Grocery Store shall be located and developed in substantial compliance with the setbacks and other standards depicted on the site plan attached as Exhibit "C200".
        iv. A variance from section 1174.03(f) of Ordinance No. 04-2103 will be required to allow the curb cut width depicted in Exhibit "C200"
        v.
        vi.
    c. Screening
        i. Landscaping and screening shall be installed in compliance with the plan attached as Exhibit "C600".
        ii.
    d. Tract Coverage
        i. Total Tract coverage will be in compliance with the plan attached as Exhibit "C200"

e. Lighting
   i. All parking lot lights and building wall-mounted lights shall be in compliance with the City's lighting standards. All freestanding parking lot lights and building wall-mounted lights shall be located and mounted to the height specified on the photometric plan attached as Exhibit "WLS-9664".
f. Graphics/Signage
   i. Wall signs on the east and west elevations of the building shall be in substantial compliance with the sign elevations attached as Exhibits "B".
      1. Wall signs will have internally illuminated lettering mounted on a non-illuminated backing
   ii. The monument signs to be located on Lot along High Street as depicted on Exhibit "C200" shall be in substantial compliance with the sign elevations attached as Exhibit "B."

3. Traffic & Parking
   a. Traffic
      i. The proposed building and associated parking lot would access High Street via a single re-aligned access point running east to west along the north side of the subject site and proposed building for vehicle traffic. Pedestrian access to High Street would utilize sidewalks on both the north and south sides of the building in addition to bike racks/parking on both the east and west sides of the building. Delivery Truck and service vehicles will access the site using the same access point and access the building using an interior loading area in the southwest corner of the building.
      ii. Site traffic will be affected by the change of land use as exhibited in Exhibit "T". In general, it is anticipated that AM peak traffic will decrease and PM peak traffic will increase.
   b. Parking
      i. The proposed parking lot shall be located and developed in substantial compliance with the setbacks and other standards depicted on the site plan attached as Exhibit "C200".
      ii. Bicycle parking shall be provided at locations noted in Exhibit "C200"

4. General Requirements
   a. Environment
      i. Stormwater Drainage
         1. The development of the facility would involve the relocation of a two existing stormwater lines that currently run through the subject site. As part of this relocation and sewer upgrade, a drainage study will be conducted to ensure that the existing runoff rate to the downstream location will not be increased or affect the downstream location in a negative manner.
            a. The development will seek City (TIF?) assistance for the relocation and upgrade of the existing storm sewer system. The feasibility and amount of assistance will be determined by Economic Development and City Staff
      ii. Utilities & Facilities
         1. The development would be serviced by the existing City of Worthington water and sewer lines on site. The existing 15" sanitary sewer running along the south property line through the site would be tapped to serve the proposed building. A sanitary sewer service line, domestic water service and fire line service would be necessary to accommodate the building. Electric service would be provided by American Electric Power and gas service would be provided by Columbia Gas of Ohio.
   b. Natural Features
      i. Natural features will be preserved and maintained in accordance with the Natural Features/Landscape plan attached as Exhibit "C700"

ii. Tree Inventory
    1. Existing on site trees will be retained or replaced in accordance with Ordinance No. 04-2013. If it is determined that full replacement would result in the unreasonable crowding of trees upon the lot, a replacement fee will be paid to the City's Special Parks Fund.

c. Public Area Payments
    i. Public area payments will be made to the City of Worthington as required by Ordinance No. 04-2013 ($100/1,000 sq. ft.)

d. Public Space Amenities
    i. Public Area Improvements shall be installed in compliance with the plans attached as Exhibits "C600" and "C200". Public Space Amenities include:
        1. An accessible plaza/dining area designated for public use
        2. Public sitting space
        3. Decorative planters
        4. Bicycle racks
        5. Decorative waste receptacles
        6. Decorative pedestrian lighting

e. Additional Information
    i. Hours of Operation
        1. 7:00am to 10:00pm
    ii. Delivery Hours
        1. 7:00am to 7:00pm
    iii. Compactor Operation
        1. Compactor operations will be limited to 7:00am to 7:00pm
    iv.

FRESH THYME
PRELIMINARY SITE IMPROVEMENT PLANS

HIGH STREET
WORTHINGTON, OHIO
MARCH 2014

INSITE REAL ESTATE, LLC

1400 16TH STREET, SUITE 300, OAK BROOK, IL 60523

WOOLPERT
DESIGN | GEOSPATIAL | INFRASTRUCTURE

One Easton Oval
Suite 310
Columbus, OH 43219
614.476.6000
FAX: 614.476.6225

SITE PLAN

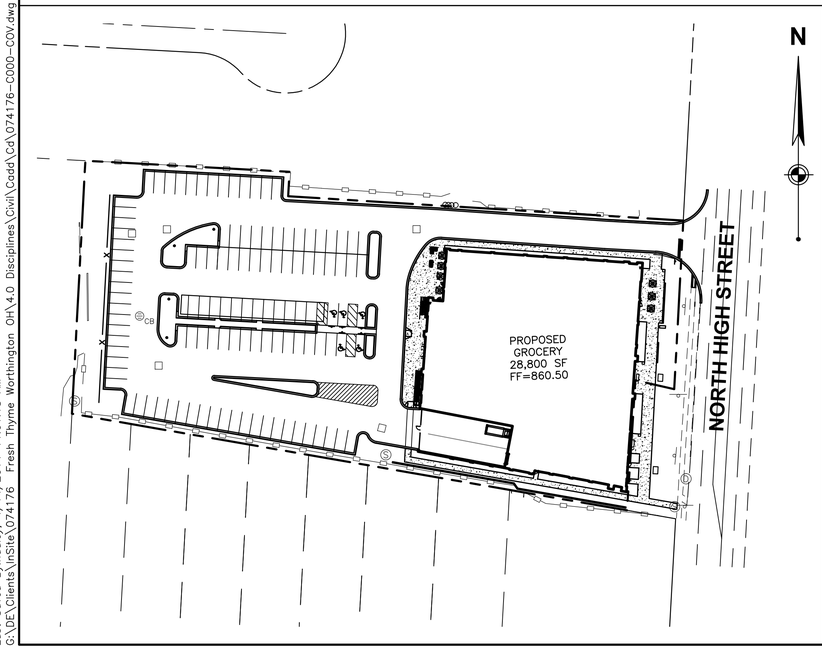

VICINITY MAP

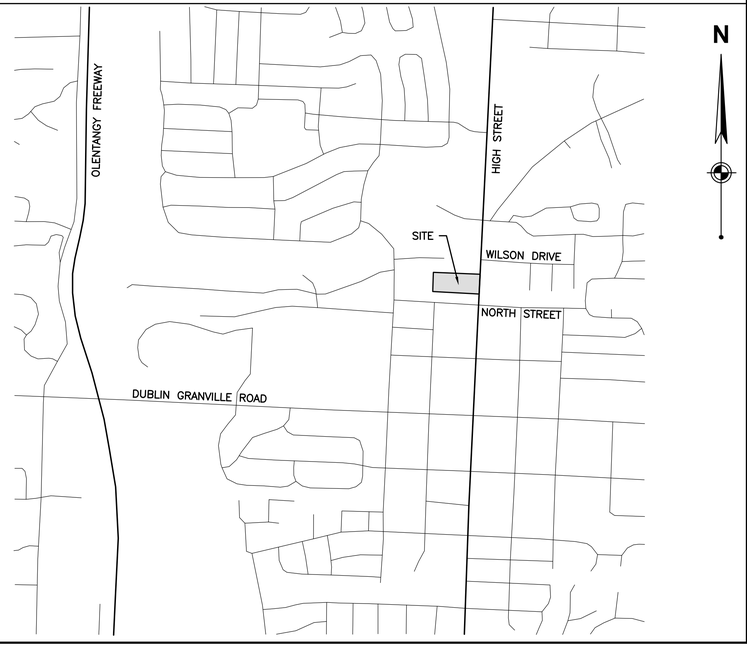

SHEET INDEX

●	–	04/15/14	C000	COVER SHEET
●	–	04/15/14	C001	ZONING AND EXISTING LAND USE MAP
●	–	04/15/14	C100	EXISTING CONDITIONS PLAN
●	–	04/15/14	C101	TREE PRESERVATION PLAN
●	–	04/15/14	C200	SITE PLAN
●	–	04/15/14	C300	PRELIMINARY GRADING AND UTILITY PLAN
●	–	04/15/14	C500	LANDSCAPE PLAN

SUPPLEMENTAL DRAWINGS

●	–	04/15/14	PHOTOMETRIC PLAN

DRAWING INDEX LEGEND

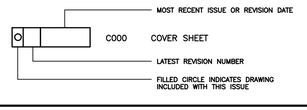

No.	DATE	REVISION

PROJECT No.: 074176

SEAL

C000

Layout Tab Name: C000, Images: Worthington OH aerial.jpg: , Xrefs: 074176-X.dwg; 074176-P.dwg
Last Saved By:hadley, 4/14/2014 11:01:18 AM
G:\DE\Clients\InSite\074176 Fresh Thyme Worthington OH\4.0 Disciplines\Civil\Cadd\Cd\074176-C000-COV.dwg Plotted By:Hadley, Dennis Plotted:April 14, 2014, 12:58:24 PM

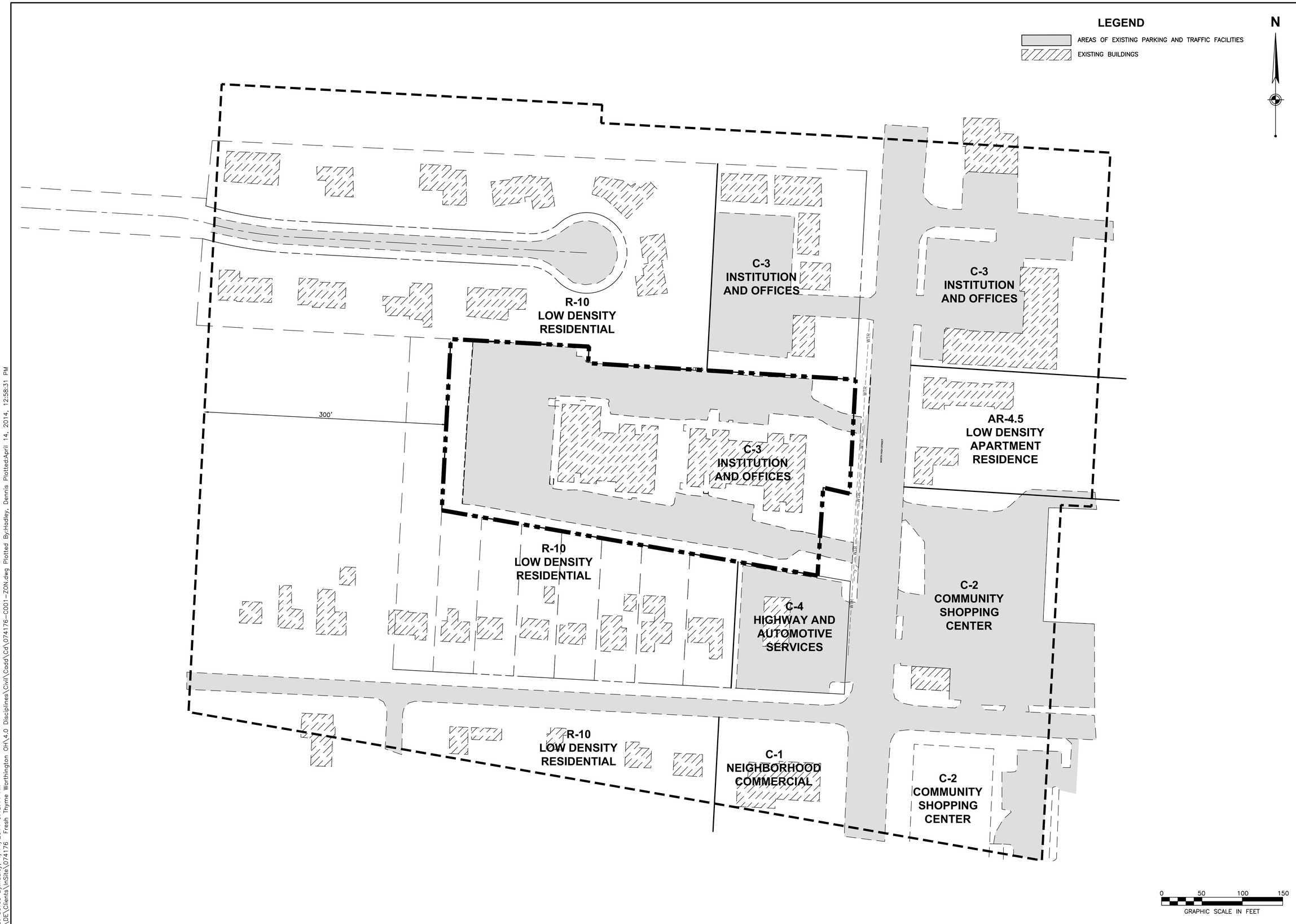

No.	DATE	REVISION

PROJECT No: 074176
DATE 04/15/14
DES. TR
DR. DH
CKD. TR

One Easton Oval
Suite 310
Columbus, OH 43219
614.476.6000
FAX: 614.476.6225
WOOLPERT
DESIGN | GEOSPATIAL | INFRASTRUCTURE

SITE IMPROVEMENT PLANS
FRESH THYME

933 HIGH STREET
WORTHINGTON, OHIO

ZONING AND EXISTING LAND USE MAP

SHEET NO.
C001

Layout Tab Name: C001, Images: Worthington OH aerial.jpg: Zoning Map.jpg: Worthington OH aerial.jpg: , Xrefs: 074176-X.dwg; 074176-P.dwg; 074176-TBLK.dwg
Last Saved By:hadley, 4/14/2014 9:48:44 AM
G:\DE\Clients\Insite\074176 Fresh Thyme Worthington OH\4.0 Disciplines\Civil\Cadd\Cd\074176-C001-ZON.dwg Plotted By:Hadley, Dennis Plotted:April 14, 2014, 12:58:31 PM

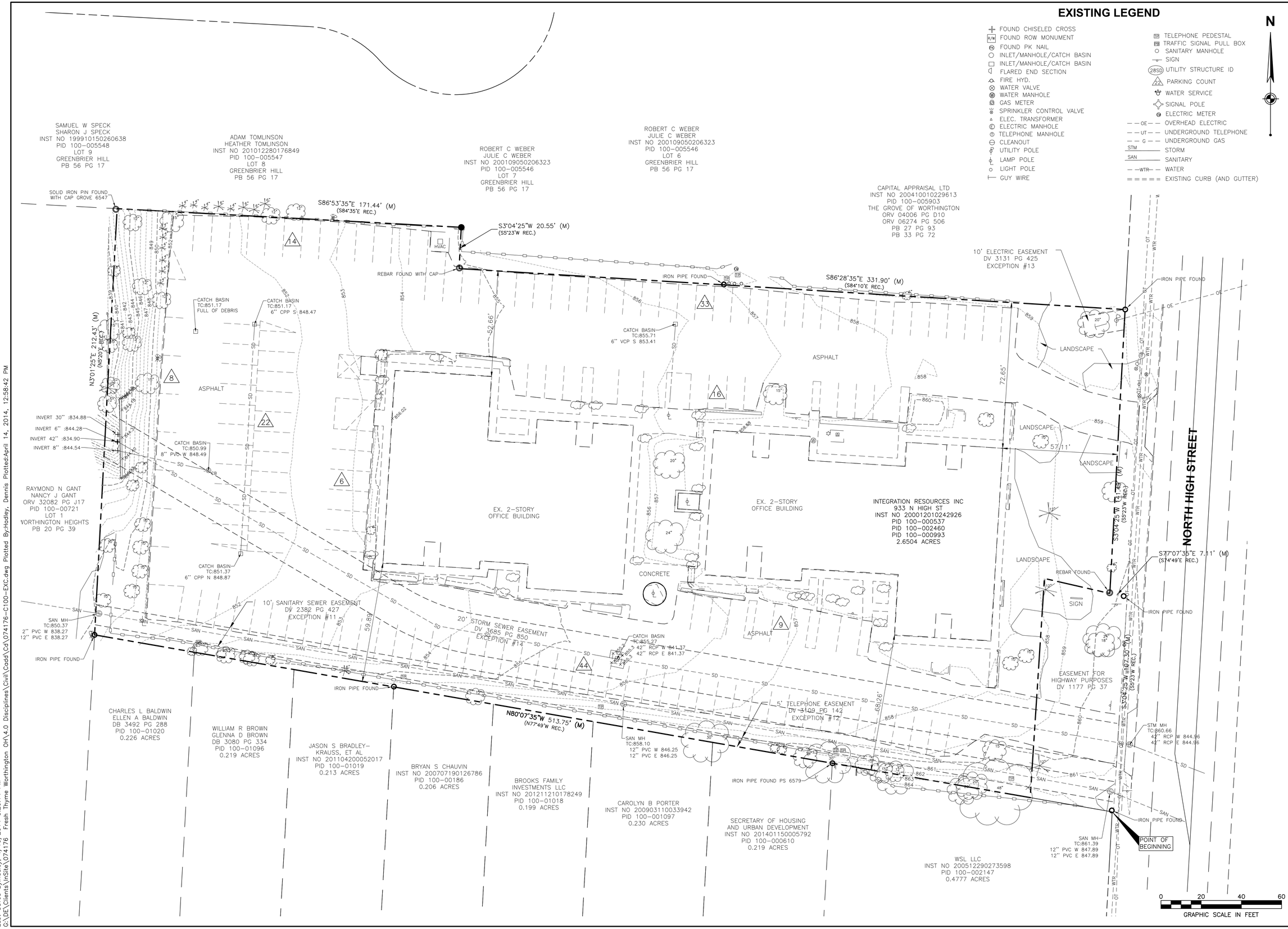

No.	DATE	REVISION

PROJECT No: 074176
DATE 04/15/14
DES. TR
DR. DH
CKD. TR

WOOLPERT
DESIGN | GEOSPATIAL | INFRASTRUCTURE
One Easton Oval
Suite 310
Columbus, OH 43219
614.476.6000
FAX: 614.476.6225

SITE IMPROVEMENT PLANS
FRESH THYME
933 HIGH STREET
WORTHINGTON, OHIO

EXISTING CONDITIONS PLAN

SHEET NO.
C100

Layout Tab Name: C100, Images: Worthington OH aerial.jpg; , Xrefs: 074176-X.dwg; 074176-P.dwg; 074176-TBLK.dwg
Last Saved By:hadley, 4/10/2014 3:20:14 PM
G:\DE\Clients\InSite\074176 Fresh Thyme Worthington OH\4.0 Disciplines\Civil\Cadd\Cd\074176-C100-EXC.dwg Plotted By:Hadley, Dennis Plotted:April 14, 2014, 12:58:42 PM

TREE PRESERVATION LEGEND

REMOVE EXISTING TREE

*ALL OTHER EXISTING TREES TO REMAIN UNDISTURBED AND PROTECTED DURING CONSTRUCTION.

EXISTING LEGEND

- FOUND CHISELED CROSS
- FOUND ROW MONUMENT
- FOUND PK NAIL
- INLET/MANHOLE/CATCH BASIN
- INLET/MANHOLE/CATCH BASIN
- FLARED END SECTION
- FIRE HYD.
- WATER VALVE
- WATER MANHOLE
- GAS METER
- SPRINKLER CONTROL VALVE
- ELEC. TRANSFORMER
- ELECTRIC MANHOLE
- TELEPHONE MANHOLE
- CLEANOUT
- UTILITY POLE
- LAMP POLE
- LIGHT POLE
- GUY WIRE
- TELEPHONE PEDESTAL
- TRAFFIC SIGNAL PULL BOX
- SANITARY MANHOLE
- SIGN
- 285SD UTILITY STRUCTURE ID
- 22 PARKING COUNT
- WATER SERVICE
- SIGNAL POLE
- ELECTRIC METER
- OE OVERHEAD ELECTRIC
- UT UNDERGROUND TELEPHONE
- G UNDERGROUND GAS
- STM STORM
- SAN SANITARY
- WTR WATER
- EXISTING CURB (AND GUTTER)

N

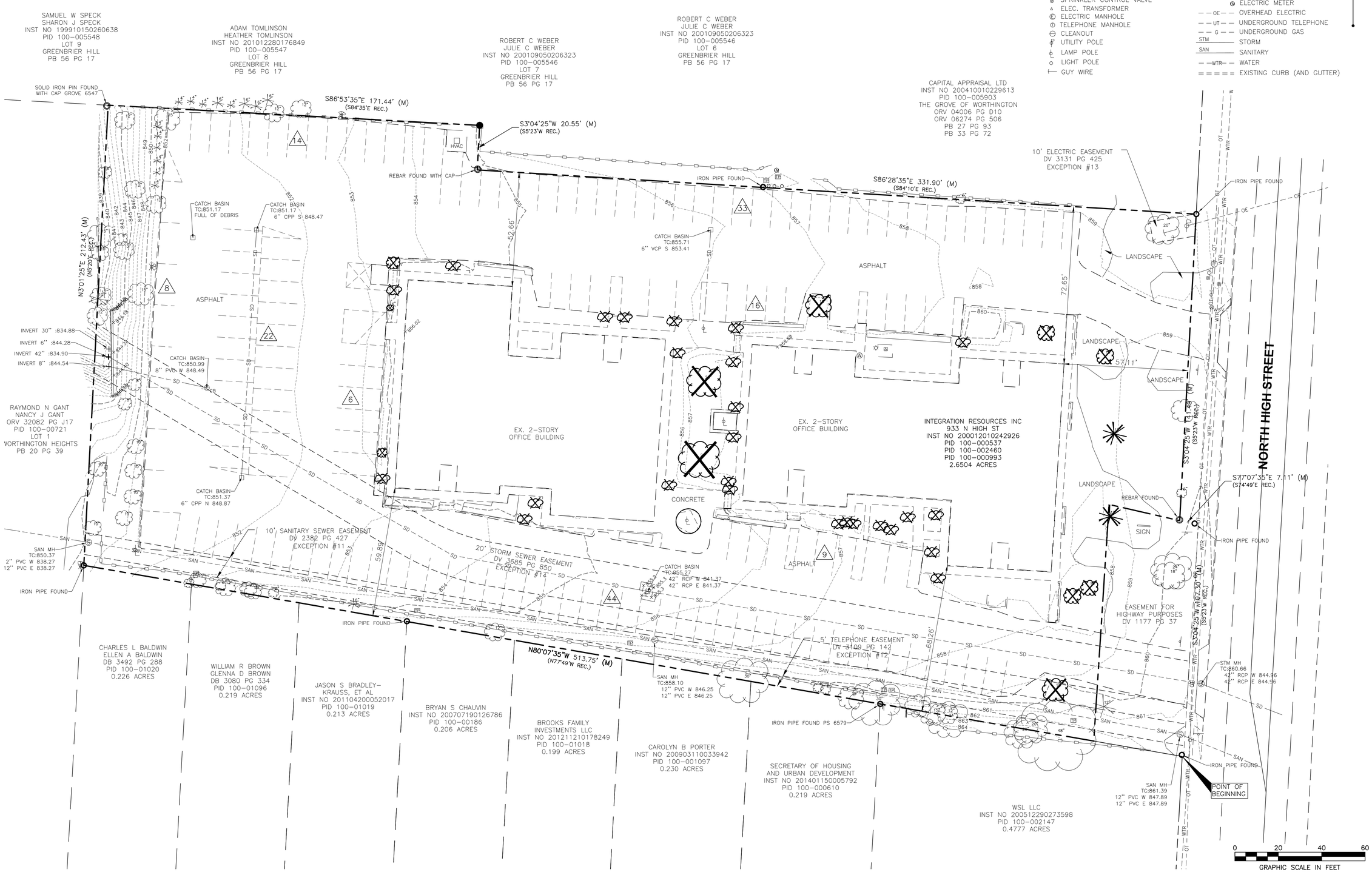

No.	DATE	REVISION

PROJECT No: 074176
DATE 04/15/14
DES. TR
DR. DH
CKD. TR

One Easton Oval
Suite 310
Columbus, OH 43219
614.476.6000
FAX: 614.476.6225
WOOLPERT
DESIGN | GEOSPATIAL | INFRASTRUCTURE

SITE IMPROVEMENT PLANS
FRESH THYME
933 HIGH STREET
WORTHINGTON, OHIO

TREE PRESERVATION PLAN

SHEET NO.

C101

Layout Tab Name: C100, Images: Worthington OH aerial.jpg; , Xrefs: 074176-X.dwg; 074176-P.dwg; 074176-TBLK.dwg
Last Saved By:hadley, 4/14/2014 9:55:59 AM
G:\DE\Clients\InSite\074176 Fresh Thyme Worthington OH\4.0 Disciplines\Civil\Cadd\Cd\074176-C101-TREE.dwg Plotted By:Hadley, Dennis Plotted:April 14, 2014, 12:58:52 PM

SITE LEGEND

- INDICATES LIGHT DUTY PAVEMENT
- INDICATES HEAVY DUTY PAVEMENT
- INDICATES CONCRETE SLABS/SIDEWALK
- LIGHT POLE/FIXTURE, WALL FIXTURE
- (10) PARKING COUNT

SITE KEY NOTES

1. STOP SIGN, R1-1 ( )
2. STOP LINE (24"), WHITE
3. ACCESSIBLE PARKING SYMBOL
4. ACCESSIBLE PARKING SIGN
5. PAINT 4" WIDE STRIPES @ 2'-0" O.C. @ 45° ANGLE, TRAFFIC YELLOW PAINT
6. PROPOSED SIDEWALK
7. ACCESSIBLE RAMP (SEE DETAIL 2/C502)
8. BEGIN/END PROPOSED CURB AND GUTTER. SAWCUT EXISTING CURB TO PROVIDE CLEAN CONSTRUCTION JOINT.
9. ACC. PARKING SPACES & THEIR ACCESS AISLES SHALL BE 2% MAX. SLOPE IN ALL DIR.
10. PAINT 4" WIDE STRIPE, TRAFFIC YELLOW PAINT
11. PROPOSED CROSSWALK

SITE NOTES

1. ALL DIMENSIONS, RADII AND COORDINATES ARE TO BACK OF CURB WHERE APPLICABLE. ALL RADII ARE 3.5' UNLESS INDICATED OTHERWISE.

2. ALL PAVEMENT MARKING SHALL BE YELLOW IN COLOR UNLESS INDICATED OTHERWISE.

SITE DATA

SITE AREA:	2.65 ACRES (APPROX.)
EXISTING ZONING:	C-3
PROPOSED ZONING:	PUD
BUILDING AREA:	28,800 SF
PARKING SPACES PROVIDED:	117
ACCESSIBLE SPACES REQUIRED:	5
ACCESSIBLE SPACES PROVIDED:	5

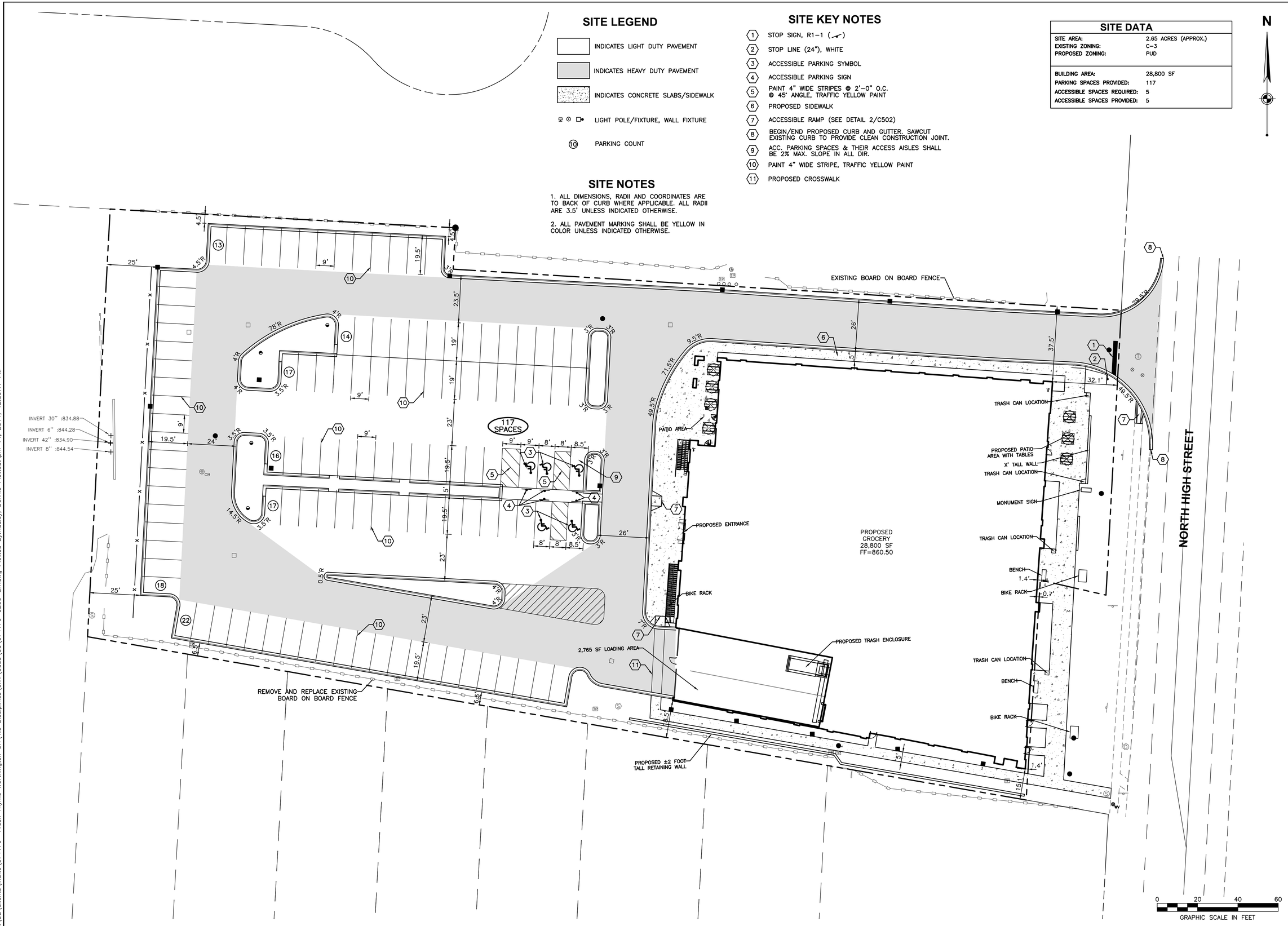

No.	DATE	REVISION

PROJECT No: 074176
DATE 04/15/14
DES. TR
DR. DH
CKD. TR

WOOLPERT
DESIGN | ENGINEERING | ENGINEERING | STRUCTURE
One Easton Oval
Suite 310
Columbus, OH 43219
614.476.6000
FAX: 614.476.6225

SITE IMPROVEMENT PLANS
FRESH THYME

933 HIGH STREET
WORTHINGTON, OHIO

SITE PLAN

SHEET NO.

C200

Layout Tab Name: C200, Images: Worthington OH aerial.jpg: , Xrefs: 074176-X.dwg; 074176-P.dwg; 074176-TBLK.dwg
Last Saved By:hadley, 4/11/2014 1:00:34 PM
G:\DE\Clients\InSite\074176 Fresh Thyme Worthington OH\4.0 Disciplines\Civil\Cadd\Cd\074176-C200-SIT.dwg Plotted By:Hadley, Dennis Plotted:April 14, 2014, 12:59:17 PM

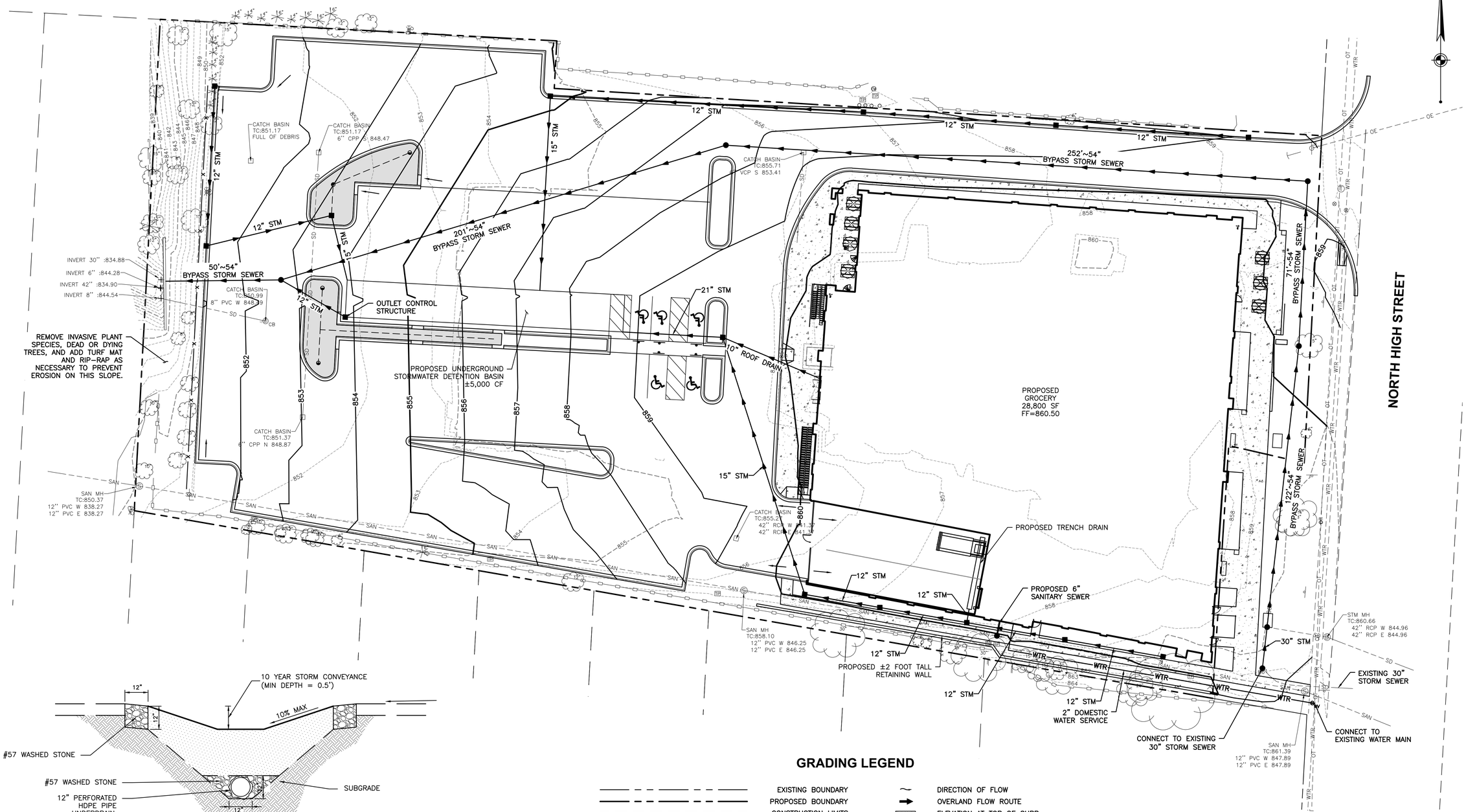

NOTES:

1. SOIL MIX: 72% SAND
   20% SHREDDED COMPOST
   8% EXISTING TOPSOIL
2. CONTRACTOR SHALL RETAIN SERVICES OF A GEOTECHNICAL ENGINEER TO TEST THE INFILTRATION RATE OF A REPRESENTATIVE SAMPLE OF THE SOIL MIX TO THE RATE OF 0.5" PER HOUR OR GREATER. IF THE RATE EXCEEDS 8" PER HOUR, REDUCE COMPOST BY HALF AND RETEST THE SOIL MIX. SEPARATE TEST RESULTS SHALL BE PROVIDED FOR EACH CONSTRUCTED SOIL BED IF NON-SIMILAR NATIVE SOILS ARE UTILIZED FOR THE MIX.
3. PLACE PERFORATED HDPE PIPE WITH FILTER FABRIC PIPE SOCK IN #57 WASHED STONE ON SUBGRADE. INSTALL CLEANOUT AT UPSTREAM END OF UNDERDRAIN.

BIOSWALE SECTION

NTS

GRADING LEGEND

EXISTING BOUNDARY	DIRECTION OF FLOW
PROPOSED BOUNDARY	OVERLAND FLOW ROUTE
CONSTRUCTION LIMITS	740.00 TC — ELEVATION AT TOP OF CURB
751 — EXISTING 1' CONTOUR	740.00 P — ELEVATION AT TOP OF PAVEMENT
750 — EXISTING 5' CONTOUR	740.00 TS — ELEVATION AT TOP OF SLAB
751 — PROPOSED 1' CONTOUR	740.00 W — ELEVATION AT TOP OF WALK
750 — PROPOSED 5' CONTOUR	740.00 RIM — ELEVATION AT STRUCTURE RIM
PROPOSED STORM DRAIN	740.00 EX — EXISTING ELEVATION
PROPOSED UNDERDRAIN	PROPOSED CATCH BASIN
PROPOSED BIOSWALE SECTION	PROPOSED CURB INLET
	PROPOSED STORM MANHOLE
	PROPOSED FLARED END SECTION
	POSITIVE SLOPED CURB AND GUTTER
	NEGATIVE SLOPED CURB AND GUTTER
	CLEANOUT
	PROPOSED VALVE

0 20 40 60
GRAPHIC SCALE IN FEET

No.	DATE	REVISION

PROJECT No: 074176
DATE 04/15/14
DES. TR
DR. DH
CKD. TR

One Easton Oval
Suite 310
Columbus, OH 43219
614.476.6000
FAX: 614.476.6225
WOOLPERT
DESIGN | GEOSPATIAL | INFRASTRUCTURE

SITE IMPROVEMENT PLANS
FRESH THYME

933 HIGH STREET
WORTHINGTON, OHIO

PRELIMINARY GRADING AND UTILITY PLAN

SHEET NO.
C300

Layout Tab Name: C300, Images: Worthington OH aerial.jpg: , Xrefs: 074176-X.dwg; 074176-P.dwg; 074176-TBLK.dwg
Last Saved By:hadley, 4/14/2014 12:53:54 PM
G:\DE\Clients\InSite\074176 Fresh Thyme Worthington OH\4.0 Disciplines\Civil\Cadd\Cd\074176-C300-GRA.dwg Plotted By:Hadley, Dennis Plotted:April 14, 2014, 12:59:42 PM

PERMANENT SOD BLEND

90% FINE LEAF FESCUE (FESTUCA ARUNDINACEA)
REBEL, REBEL II, WRANGLER, BONANZA, MOJAVE
OR EQUAL
10% KENTUCKY BLUEGRASS (POA PRATENSIS)
MIDNIGHT, RUGBY II, MIDIRON VARIETIES OR
EQUAL
98% PURITY AND 85% GERMINATION
95% WEED FREE

LANDSCAPE NOTES

1. ALL PLANT MATERIAL SHALL CONFORM TO THE AMERICAN ASSOCIATION OF NURSERYMEN, ANSI Z60.1, CURRENT EDITION.
2. ALL WORK SHALL BE DONE IN STRICT ACCORDANCE WITH THE WORTHINGTON LANDSCAPE ORDINANCE.
3. ALL PLANTED AREAS AND LANDSCAPE ISLANDS SHALL RECEIVE A 3" LAYER OF SHREDDED HARDWOOD BARK MULCH.
4. THE SIZES OF PLANT MATERIAL SHOWN IN THE PLANT CHART ARE THE MINIMUM REQUIRED AT THE TIME OF PLANTING. CONTRACTOR TO PROVIDE INFORMATION AT TIME OF BIDDING IF ALTERNATE MATERIALS ARE SUGGESTED.
5. ALL LANDSCAPE MATERIAL INSTALLED SHALL BE MAINTAINED BY THE LANDSCAPE CONTRACTOR UNTIL FINAL ACCEPTANCE BY THE OWNER.
6. ALL DISTURBED AREAS NOT RECEIVING PLANTINGS (INCLUDING RIGHT-OF-WAYS) SHALL RECEIVE EIGHT INCHES OF TOPSOIL, SOD, AND WATER UNTIL A HEALTHY STAND OF GRASS IS ESTABLISHED.

N

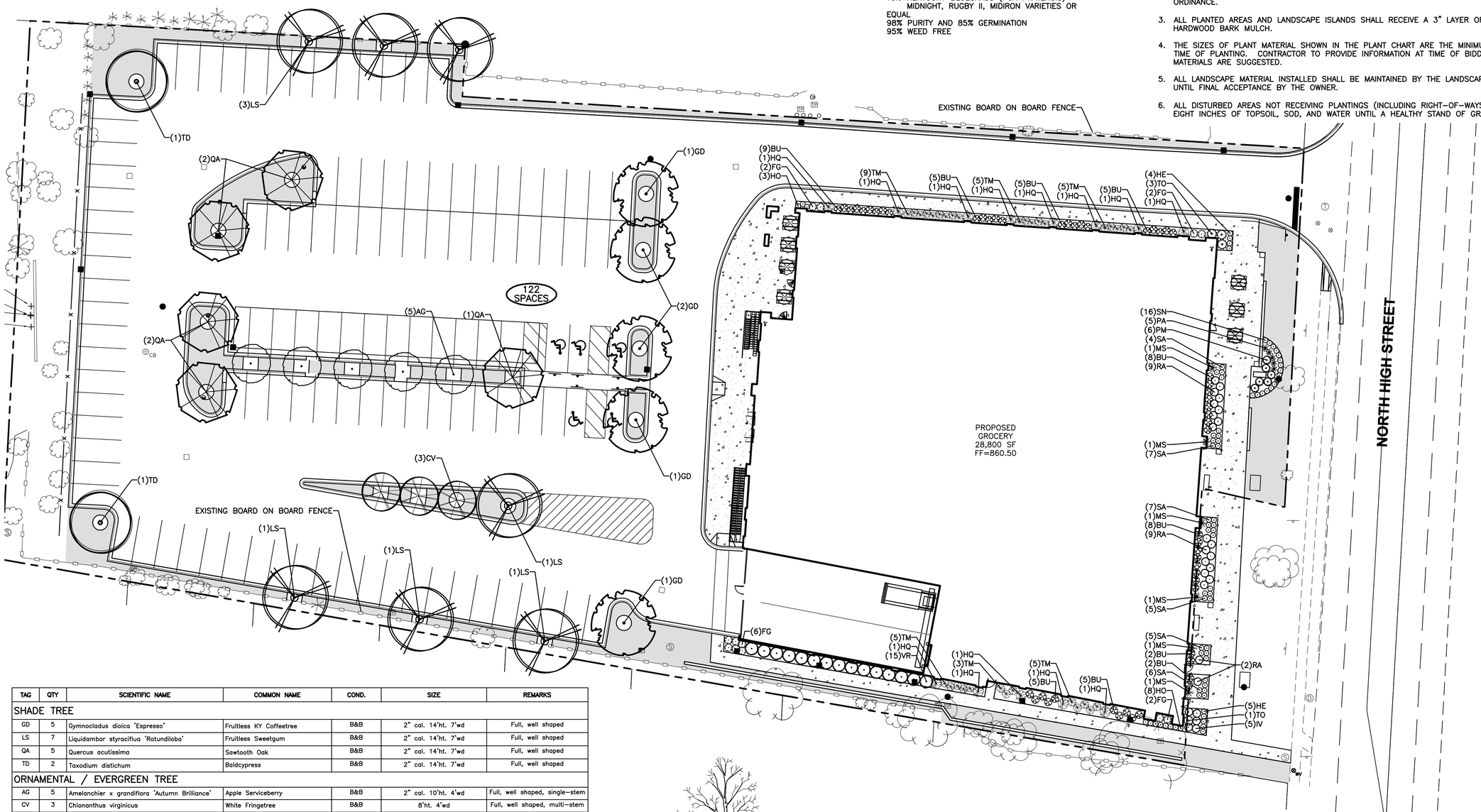

TAG	QTY	SCIENTIFIC NAME	COMMON NAME	COND.	SIZE	REMARKS
SHADE TREE						
GD	5	Gymnocladus dioica 'Espresso'	Fruitless KY Coffeetree	B&B	2" cal. 14'ht. 7'wd	Full, well shaped
LS	7	Liquidambar styraciflua 'Rotundiloba'	Fruitless Sweetgum	B&B	2" cal. 14'ht. 7'wd	Full, well shaped
QA	5	Quercus acutissima	Sawtooth Oak	B&B	2" cal. 14'ht. 7'wd	Full, well shaped
TD	2	Taxodium distichum	Baldcypress	B&B	2" cal. 14'ht. 7'wd	Full, well shaped
ORNAMENTAL / EVERGREEN TREE						
AG	5	Amelanchier x grandiflora 'Autumn Brilliance'	Apple Serviceberry	B&B	2" cal. 10'ht. 4'wd	Full, well shaped, single-stem
CV	3	Chionanthus virginicus	White Fringetree	B&B	8'ht. 4'wd	Full, well shaped, multi-stem
EVERGREEN SHRUB						
BU	54	Buxus microphylla koreana 'Wintergreen'	Wintergreen Boxwood	#3 cont.	18"ht. 18"wd	Full, vigorous
PM	6	Pinus mugo 'Compacata'	Mugo Pine	B&B	18"ht. 18"wd	Full, vigorous
TM	32	Taxus x media 'Densiformis'	Dense Yew	B&B	18"ht. 18"wd	Full, vigorous
TO	4	Thuja occidentalis 'Emerald'	Emerald Arborvitae	B&B	36"ht. 18"wd	Full, vigorous
VR	15	Viburnum rhytidophyllum	Leatherleaf Viburnum	B&B	36"ht. 24"wd	Full, vigorous
DECIDUOUS SHRUB						
FG	12	Fothergilla gardenii	Dwarf Fothergilla	#3 cont.	18"ht. 18"wd	Full, vigorous
HQ	13	Hydrangea quercifolia 'Sykes Dwarf'	Oakleaf Hydrangea	B&B	24"ht. 24"wd	Full, vigorous
IV	5	Itea virginica 'Little Henry'	Little Henry Sweetspire	#3 cont.	18"ht. 18"wd	Full, vigorous
RA	20	Rhus aromatica 'Gro-Low'	Gro-Low Fragrant Sumac	#3 cont.	12"ht. 18"wd	Full, vigorous
ORNAMENTAL GRASS						
MS	6	Miscanthus sinensis 'Purpurescens'	Purple Maiden Grass	#3 cont.		Full, vigorous
PA	5	Pennisetum alopecuroides 'Hameln'	Dwarf Fountain Grass	#2 cont.		Full, vigorous
GROUNDCOVER						
JS	54	Juniperus chinensis sargentii 'Viridis'	Green Sargent Juniper	#3 cont.		4' on center
PERENNIAL						
HE	9	Hemerocalis 'Siloame Double Classic'	Repeat Blooming Daylily	#1 cont.		
HO	11	Hosta 'Guacamole'	Guacamole Hosta	#1 cont.		
SN	16	Salvia nemorosa 'May Night'	May Night Salvia	#1 cont.		
SA	34	Sedum 'Autumn Joy'	Autumn Joy Stonecrop	#1 cont.		
	9,000 SF	Permanent Sod Blend				

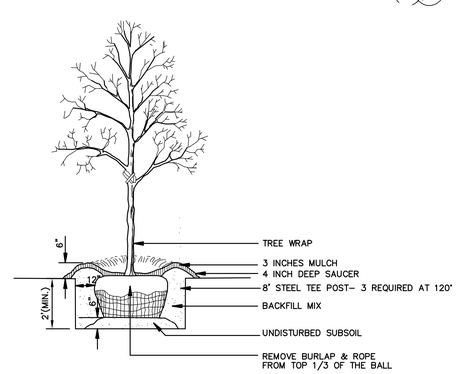

NOTE: SEE LANDSCAPE NOTES FOR THE TYPE OF MULCH MATERIAL TO USE.

TREE PLANTING

N.T.S.

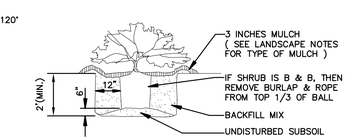

SHRUB PLANTING

N.T.S.

LANDSCAPE CODE SUMMARY

1171.02 SPECIAL PARKING PROVISIONS

REQUIREMENT: 1 2" CAL TREE PER 6 PARKING SPACES

REQUIRED: 122 SPACES = 20.3 TREES

PROVIDED: 13 SHADE TREES
8 ORNAMENTAL TREES

0 20 40 60
GRAPHIC SCALE IN FEET

No.	DATE	REVISION

PROJECT No: 074176
DATE 03/14/14
DES. TR
DR. DH
CKD. TR

WOOLPERT
DESIGN | ENGINEERING | INFRASTRUCTURE
One Easton Oval
Suite 310
Columbus, OH 43219
614.476.6000
FAX: 614.476.6225

SITE IMPROVEMENT PLANS
FRESH THYME

933 HIGH STREET
WORTHINGTON, OHIO

LANDSCAPE PLAN

SHEET NO.
C400

Layout Tab Name: C400_Images: Worthington OH aerial.jpg: . Xrefs: 074176-X.dwg; 074176-P.dwg; 074176-TBLK.dwg
Last Saved By:hadley 4/10/2014 4:02:27 PM Fresh Thyme Worthington OH\4.0 Disciplines\Civil\Cadd\Cd\074176-C400-LAN.dwg Plotted By:Martin, John Plotted:April 14, 2014, 8:07:14 AM
W:\Srvin\DE\Chicago\Clients\InSite\074176

WEST ELEVATION

Scale: 1/8" = 1'-0"

EAST ELEVATION - HIGH STREET

Scale: 1/8" = 1'-0"

NORTH ELEVATION

Scale: 1/8" = 1'-0"

SOUTH ELEVATION

Scale: 1/8" = 1'-0"

NORR
ARCHITECTS ENGINEERS PLANNERS
719 Griswold Street
Suite 1000
Detroit, MI 48226
www.norr.com

InSite

FRESH THYME MARKET, 933 HIGH STREET, WORTHINGTON, OH.

APRIL 11, 2014

HIGH STREET - PERSPECTIVE LOOKING SOUTH -WEST

NORR
ARCHITECTS ENGINEERS PLANNERS
719 Griswold Street
Suite 1000
Detroit, MI 48226
www.norr.com

InSite

FRESH THYME MARKET, 933 HIGH STREET, WORTHINGTON, OH.

APRIL 11, 2014

MONUMENT SIGN

Scale: 1/8" = 1'-0"

EXTERIOR FINISH SCHEDULE

TAG	MATERIAL / DESCRIPTION	MFR./ STYLE / CAT. NO.	COLOR	NOTES
E1	QUICK BRICK OR APPROVED ALTERNATE	HARVARD BRICK	"HERITAGE BLEND"	SPECIFICATIONS INSTALLED PER MANUF.
E2	STANDING SEAM METAL ROOF	TBD	COLOR MATCH ROCKWOOD DARK GREEN SW 2816	ROOF , AWNINGS SPECIFICATIONS
E3	CAST STONE	TBD	SANDSTONE	CORNICES, SILLS, MORTAR TO MATCH STONE
E4	MANUFACTURED STONE VENEER	CULTURED STONE OR APPROVED EQUAL	CHARDONNAY LEDGESTONE	INSTALLED PER MANUF. SPECIFICATIONS
E5	PAINT	SHERWIN WILLIAMS	ROYCROFY COPPER RED SW 2839	HOLLOW MTL & OH. DOORS/FRAMES, GUTTERS/DOWNSPOUTS
E6	PAINT	SHERWIN WILLIAMS	ROCKWOOD DARK GREEN SW 2816	MTL. TRIM / ACCESSORIES
E7	PAINT	SHERWIN WILLIAMS	CONCORD BUFF SW 7684	TRIM , COPPING, ACCESSORIES
E8	BOLLARD COVER	INNOPLAST BOLLARDGARD BC752 OR BC452	YELLOW	TYP FOR ALL PIPE BOLLARDS
E9	PREFINISHED METAL COPING		COLOR MATCH CAST STONE	INSTALLED PER MANUF.
E10	ALUM STOREFRONT	TBD	DARK BRONZE	INSTALLED PER MANUF.
E11	ALUM AUTOMATIC ENTRANCE SYSTEM	TBD	DARK BRONZE	INSTALLED PER MANUF.
E12	METAL AWNING	TBD	COLOR MATCH ROCKWOOD DARK GREEN SW 2816	SUPPLIED & INSTALLED BY GC
E13	PRE MANUF. METAL CANOPY SYSTEM	TBD	COLOR MATCH ROCKWOOD DARK GREEN SW 2816	
E14	FIBER CEMENT SIDING	CERTAINTEED	COLOR MATCH PMS-181 BROWN/ SW 2839	VERTICAL SIDING WITH BATTENS
E15	SPANDREL GLAZING	VIRACON	GRAY	INSTALLED PER MANUF. SPECIFICATIONS
E16	BARN DOOR PANELS	STAINED	SW 3134-B WEATHERED TEAK	INSTALLED PER MANUF. SPECIFICATIONS
E17	ACCENT TRIM	CERTAINTEED	COLOR MATCH E16	INSTALLED PER MANUF. SPECIFICATIONS

NOTE: SIGNAGE UNDER SEPARATE PERMIT. REFER TO APPROVED SIGNAGE PACKAGE FROM SIGNAGE VENDOR FOR SIZES AND LOCATIONS OF SIGNS. EXTERIOR SIGNAGE TO BE EXPANSION ANCHORED.

LEGEND

XX - RE: EXTERIOR FINISH SCHEDULE

ALTERNATE SHUTTER INSTALLATION

IMAGE FOR REFERENCE ONLY

Scale: 1/8" = 1'-0"

SAVANNAH STYLE SHUTTER (WOOD OR VINYL)

Scale: 1/8" = 1'-0"

NORR
ARCHITECTS ENGINEERS PLANNERS
719 Griswold Street
Suite 1000
Detroit, MI 48226
www.norr.com

InSite

FRESH THYME MARKET, 933 HIGH STREET, WORTHINGTON, OH.

APRIL 11, 2014

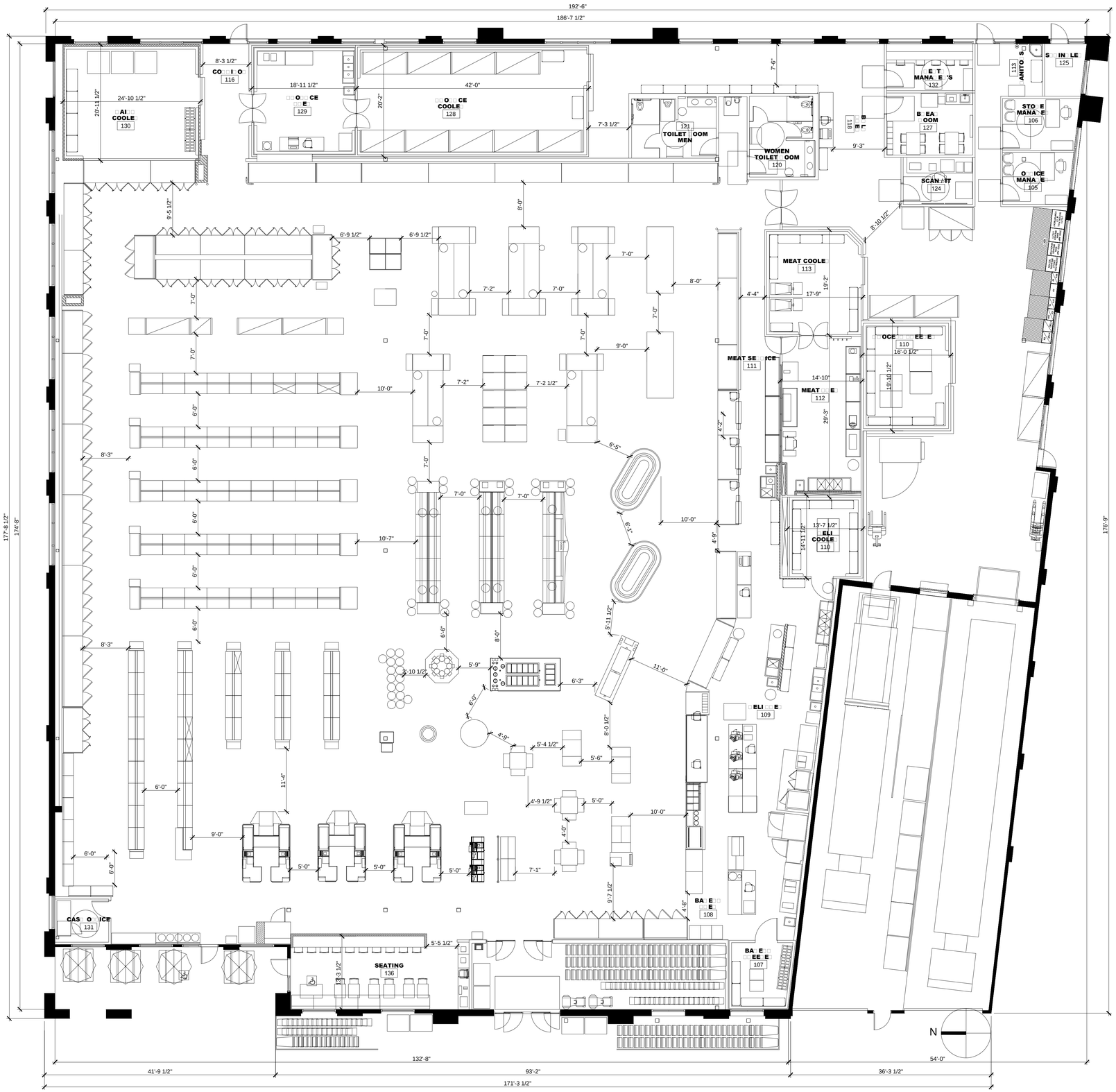

FLOOR PLAN / MERCHENDISE PLAN

Scale: 1/8" = 1'-0"

FRESH THYME MARKET, 933 HIGH STREET, WORTHINGTON, OH.

InSite

NORR
ARCHITECTS ENGINEERS PLANNERS

719 Griswold Street
Suite 1000
Detroit, MI 48226
www.norr.com

A IL

REVISIONS

Rev #	Date	By:
1	3/28/14	J.P.
2	4/14/14	J.P.

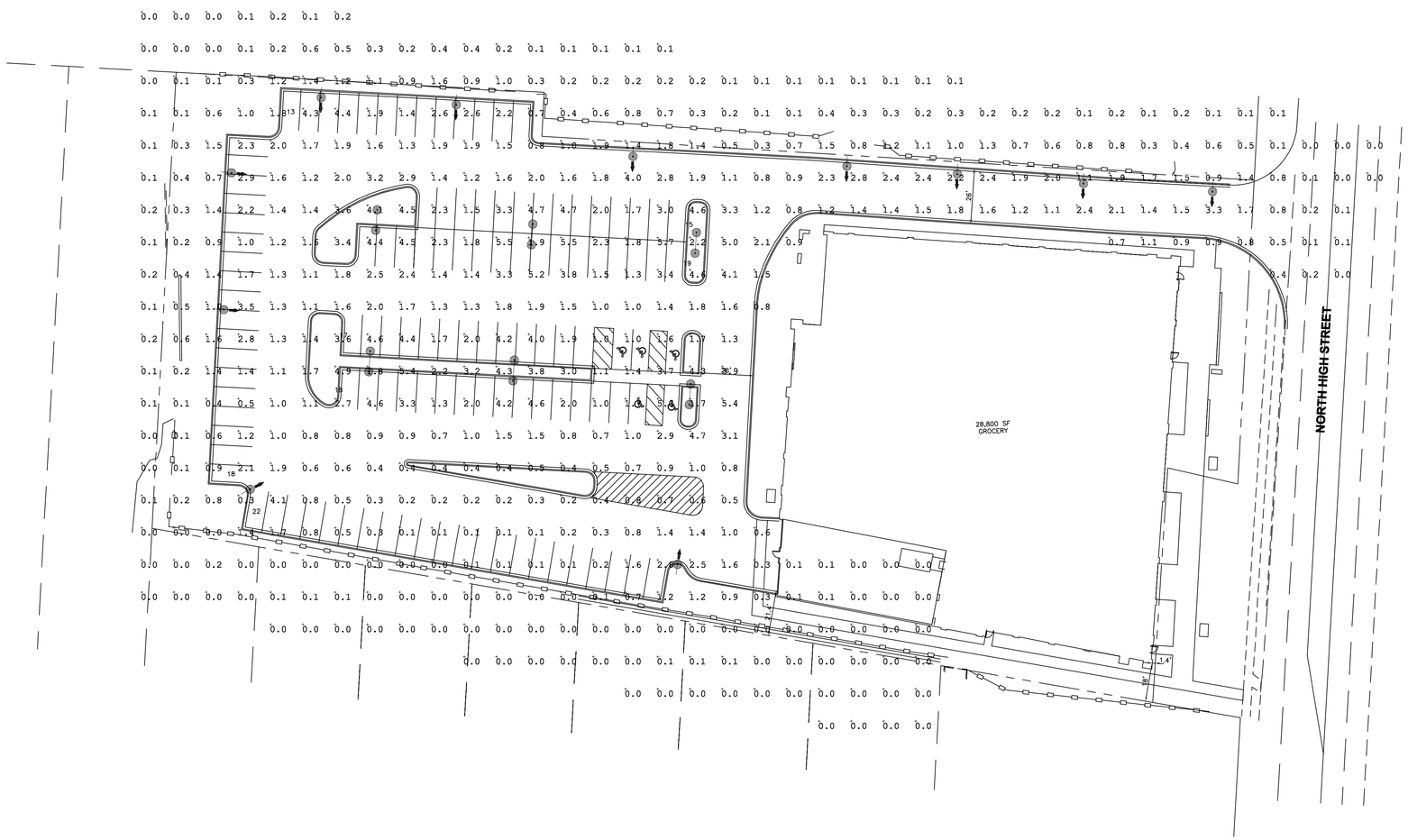

AS A RESULT OF THE COLOR OF THE LIGHT SOURCE (5000K, CRI-90+), THE "SEE-ABILITY" PRODUCED BY THIS LIGHTING SOLUTION WILL APPEAR AT LEAST 30% BRIGHTER THAN THIS PHOTOPIC MODEL SUGGESTS.

Calculation Summary							
Label	Avg	Max	Min	Avg/Min	Max/Min	PtSpcLr	PtSpcTb
OVERALL PARKING SUMAMRY	1.90	5.7	0.1	19.00	57.00	15	15

Luminaire Schedule					
WLS9664 FRESH THYME WORTHINGTON, OH PM: STEVE PLEASE CALL US FOR PRICING AT 1-800-633-8711					
Symbol	Qty	Label	Lumens	LLF	Description
	6	A	13000	0.800	WLS-LX-S-5-150-CMH-FG-V-SA 15' MOUNTING HEIGHT
	11	B	13000	0.800	WLS-LX-S-FP-150-CMH-FG-V-SA 15' MOUNTING HEIGHT

Based on the information provided, all dimensions and luminaire locations shown represent recommended positions. The engineer and/or architect must determine applicability of the layout to existing or future field conditions.

This lighting pattern represents illumination levels calculated from laboratory data taken under controlled conditions utilizing current industry standard lamp ratings in accordance with Illuminating Engineering Society approved methods. Actual performance of any manufacturer's luminaire may vary due to variation in electrical voltage, tolerance in lamps and other variable field conditions.

WLS LIGHTING SYSTEMS — LX SERIES

VERTICAL / HORIZONTAL LAMP
FLAT GLASS / CONTOURED LENS

Flat lensed fixtures meet IESNA full cutoff classification

DIMENSIONS

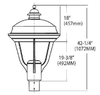

LX-M POST TOP

LX-S POST TOP

IP65

c UL us LISTED wet location

SPECIFICATIONS

HOUSING - Modular fixture is available in small or medium sizes. One piece housing and support frame is die-cast aluminum. Pole top ballast enclosure, access cover and support arms are die-cast aluminum. Housing is sealed with an extruded silicone gasket.

HOUSING TOP CAP - Removable spun aluminum cap, which provides "Top Access" for relamping is retained by captive stainless steel fasteners and safety cables. Housing and top cap interface is sealed with a one-piece extruded silicone gasket. Toolless entry option is available.

LENS - Lens is flat tempered glass, which is sealed to the die-cast aluminum housing with an extruded, high temperature, silicone gasket and retained internally by zinc plated steel clips. A decorative, acrylic drop lens is available to add a traditional appearance to the standard flat lens.

LAMP HOLDER - Matched to the lamp. Glazed porcelain in either medium or mogul base, 4KV pulse rated, with spring center contact. CFL fixtures have a one-piece, four pin, thermoplastic lampholder.

LIGHT SOURCES - Pulse-Start Metal Halide, Natural White, Metal Halide Reduced Envelope, Ceramic Metal Halide, High Pressure Sodium, and CFL - Compact Fluorescent.

BALLASTS - Ballast is mounted on a removable power tray. Toolless option is available. Electronic HID ballasts are available in select wattages for 120 - 277V current. Dimmable Electronic HID ballasts are available in select wattages for 120 - 277V current. Core and coil ballasts are high-power factor designed for -20°F operation. CFL ballasts are universal electronic, with 0°F starting, which accommodate current from 120 - 277V in either 50HZ or 60HZ for worldwide operation. Terminal block, for easy wiring, is standard with all magnetic ballast types.

OPTICS - Four available distributions - Type II, III, V and FT - Forward Throw Perimeter. Reflectors may be rotated in 90° increments. Lamps may be vertically or horizontally oriented.

FASTENERS - All exposed fasteners are black oxide coated stainless steel. Internal fasteners are stainless steel or zinc electro-plated steel.

FINISH - Fixtures are finished with WLS DuraGrip® polyester powder coat finishing process. The DuraGrip® finish withstands extreme weather changes without cracking or peeling, and is guaranteed for five full years. Standard colors include bronze, black, platinum plus, buff, graphite, satin verde green, metallic silver and white.

SHIELDING - Internal glare shields, rock guards, and vandal shields are available.

Approved By: _____ Project Name: _____
Location: _____ Date: _____

WLS LIGHTING SYSTEMS
Consider the Impact!
1919 Windsor Place ◦ Fort Worth, TX 76110 ◦ 800.633.8711 ◦ Fax: 817.735.4824 ◦ www.wlslighting.com

Specifications subject to change without notice.

01 Rev. 11/12

LX SERIES

VERTICAL / HORIZONTAL LAMP
FLAT GLASS / CONTOURED LENS

ORDERING INFORMATION SELECT APPROPRIATE CHOICE FROM EACH COLUMN TO FORMULATE ORDER CODE. Refer to example below.

Series	Distribution	Lamp Wattage	Light Source*	Lens	Lamp Orientation	Mounting Style	Line Voltage	Luminaire Finish	Options
LX-S	**2** - Type II **3** - Type III **5** - Type V **FT** - Forward Throw Perimeter	**39W** **50W** **70W** **100W** **150W**	**HPS** - High Pressure Sodium **EMH** - Metal Halide Lamp with Electronic Ballast **CMH** - Ceramic Metal Halide	**FG** - Flat Glass **DA** - Acrylic Drop Lens	**V** - Vertical **H** - Horizontal	**PT** - Post Top **AR** - Arm Mount **WM** - Wall Mount	**480** **MT** - Multi Tap **TT** - Tri-Tap **UE** (120 - 277)[1] **UEDIM** (120 - 277)[1]	**BRZ** - Bronze **BLK** - Black **BUF** - Buff **GPT** - Graphite **MSV** - Metallic Silver **SVG** - Satin Verde Green **WHT** - White **PLP** - Platinum Plus **CC** - Custom Color	**LL** - Less Lamp **EQ** - Emergency Quartz (Separate Circuit) **SQN** - Standby Quartz (Non-time Delay) **SQT** - Standby Quartz (Time Delay) **PC120** - 120V Photocell **PCHV** - 208 - 277V Photocell **TE** - Tooless Entry **NO** - No Options
		175W	**PSMH** - Pulse Start						
	5 - Type V (only)	**26W** **32W** **42W** **57W**	**CFL** - Compact Fluorescent **CFL2** - Compact[3] Fluorescent	**FG** - Flat Glass **DA** - Acrylic Drop Lens	**H** - Horizontal				**ACCESSORIES** **FK120, FK277, FK347** - Single Fusing **DFK208, DFK240, DFK480** - Double Fusing **ISS** - Internal Glare Shield **RG** - Rock Guard (LX-S only) **SPA** - Square Pole Adapter **WM** - Wall Mount **BK SPT BD** - Small Bolt on Bracket (PT only) **BK MPT BD** - Medium Bolt on Bracket (PT only) **VS** - Vandal Shield **NA** - No Accessories
LX-M	**2** - Type II **3** - Type III **5** - Type V **FT** - Forward Throw Perimeter	**250W** **400W**	**PSMH** - Pulse Start Metal Halide **HPS** - High Pressure Sodium **MHR** - Metal Halide Reduced*	**FG** - Flat Glass **DA** - Acrylic Drop Lens	**V** - Vertical **H** - Horizontal	**PT** - Post Top **AR** - Arm Mount **WM** - Wall Mount	**480** **MT** - Multi Tap [2] **TT** - Tri-Tap[1] **UE** (208 - 277) **UEDIM** (208 - 277)		
		250W **320W** **400W** [4]	**NW** - Natural White						

LX-S	5	100	EMH	F	V	PT	MT	BRZ	NO/NA

(EXAMPLE ORDER)
ORDER:
WLS-LX- _____

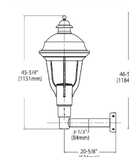

LX SERIES SMALL POST TOP WM

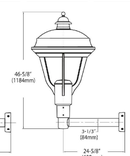

LX SERIES MED. POST TOP WM

* In accordance with the 2007 Energy Independance and Security Act (EISA), fixtures will no longer be available in Probe Start Metal Halide with wattages from 150 watts through 500 watts for new installations. Replacement parts for existing fixtures are still available.

FOOTNOTES:
1 - EMH and CFL only.
2 - PSMH only.
3 - Dual CFL Lamps.
4 - Vertical lamp only.

LUMINAIRE EPA CHART

Configuration	Mounting Style	Small Fixture	Medium Fixture
S - Single	PT	1.1	1.4
D-180	PT	2.2	2.7
S - Single	SA	1.1	1.4
D-180	SA	2.2	2.8
D-90	SA	1.9	2.4
T-120	SA	3.0	3.8
T-90	SA	3.0	3.7
Q-90 Quad	SA	3.8	4.8

Approved By: _____ Project Name: _____
Location: _____ Date: _____

WLS LIGHTING SYSTEMS
Consider the Impact!
1919 Windsor Place ◦ Fort Worth, TX 76110 ◦ 800.633.8711 ◦ Fax: 817.735.4824 ◦ www.wlslighting.com

01 Rev. 11/12

1919 WINDSOR PLACE
FORT WORTH, TX 76110
WWW.WLSLIGHTING.COM

WLS LIGHTING SYSTEMS
Consider the Impact!

800-633-8711

SHEET 1 OF 1

BY- TO

PM- STEVE

SCALE: 1"=30'

DATE- 3/25/14

WLS- 9664

FRESH THYME
WORTHINGTON, OH

933 High Street Legal Description

Situated in the City of Worthington, County of Franklin, State of Ohio, described as follows:

Situated in Lot Number 29, in Section 3, Township 2 North, Range 18 West, United States Military Lands, in the City of Worthington, County of Franklin, State of Ohio, and being a portion of a 0.437 acre tract of land conveyed to Leonidas C. Scatterday by deed of record in Deed book 2958, Page 67, and being a portion of a 0.510 acre tract of land conveyed to Leonidas C. Scatterday by deed of record in Deed Book 2507, Page 37, and being a portion of a 1.805 acre tract of land conveyed to Leonidas C. Scatterday by deed of record in Deed Book 1589, Page 570, all references to the Recorder's Office, Franklin County, Ohio, and bounded and described as follows:

Beginning at a drill hole in a concrete sidewalk at the southeast corner of said 1.805 acre tract;

Thence North 77 degrees 49 minutes West, a distance of 513.75 ft. to an iron pin set marking the Southwest corner of said 1.805 acre tract;

Thence North 5 degrees 20 minutes East, a distance of 212.43 ft. to an iron in found at the northeast corner of Lot Number 1 of Worthington Heights Subdivision, of record in Plat Book 20, Page 39, Recorder's Office, Franklin County, Ohio, said iron pin also marking the northwest corner of the said 1.805 acre tract;

Thence and along a portion of the North line of Lot No. 29 South 84 degrees 35 minutes East, a distance of 171.44 ft. to an iron pin found;

Thence South 5 degrees 23 minutes West, a distance of 20.55 ft. to an iron pin set, said iron pin being South 5 degrees 23 minutes West, a distance of 13.29 ft. from the northwest corner of said 0.437 acre tract and the southwest corner said 0.423 acre tract of land now or formerly owned by B.W. Williams et al (4), by deed of record in Deed Book 2948, Page 397, Recorder's Office, Franklin County, Ohio.

Thence and parallel with the North line of said 0.437 acre tract and the South line of said 0.423 acre tract South 84 degrees 10 minutes East, a distance of 331.90 ft. to an iron pin found in the West line of High Street (U.S. Route No. 23);

Thence and along portions of the East lines of said 0.437 acre tract and 0.310 acre tract South 5 degrees 23 minutes West, a distance of 141.49 ft. to an iron pin set marking an angle point in the West line of High Street;

Thence South 74 degrees 49 minutes East, a distance of 7.11 ft. to an iron pin set;

Thence and along the West line of High Street and along the East line of said 1.805 acre tract South 5 degrees 23 minutes West, a distance of 107.30 ft. to the point of beginning containing 2.6504 acres, more or less.

The bearing given in the above description correspond to the bearing shown in deeds to subject tract.

This legal description prepared by Harry L. Greene, Registered Surveyor No. 4058, Curry Hawk Willis and Grove, 2160 Tremont Center, Columbus, Ohio 43221.

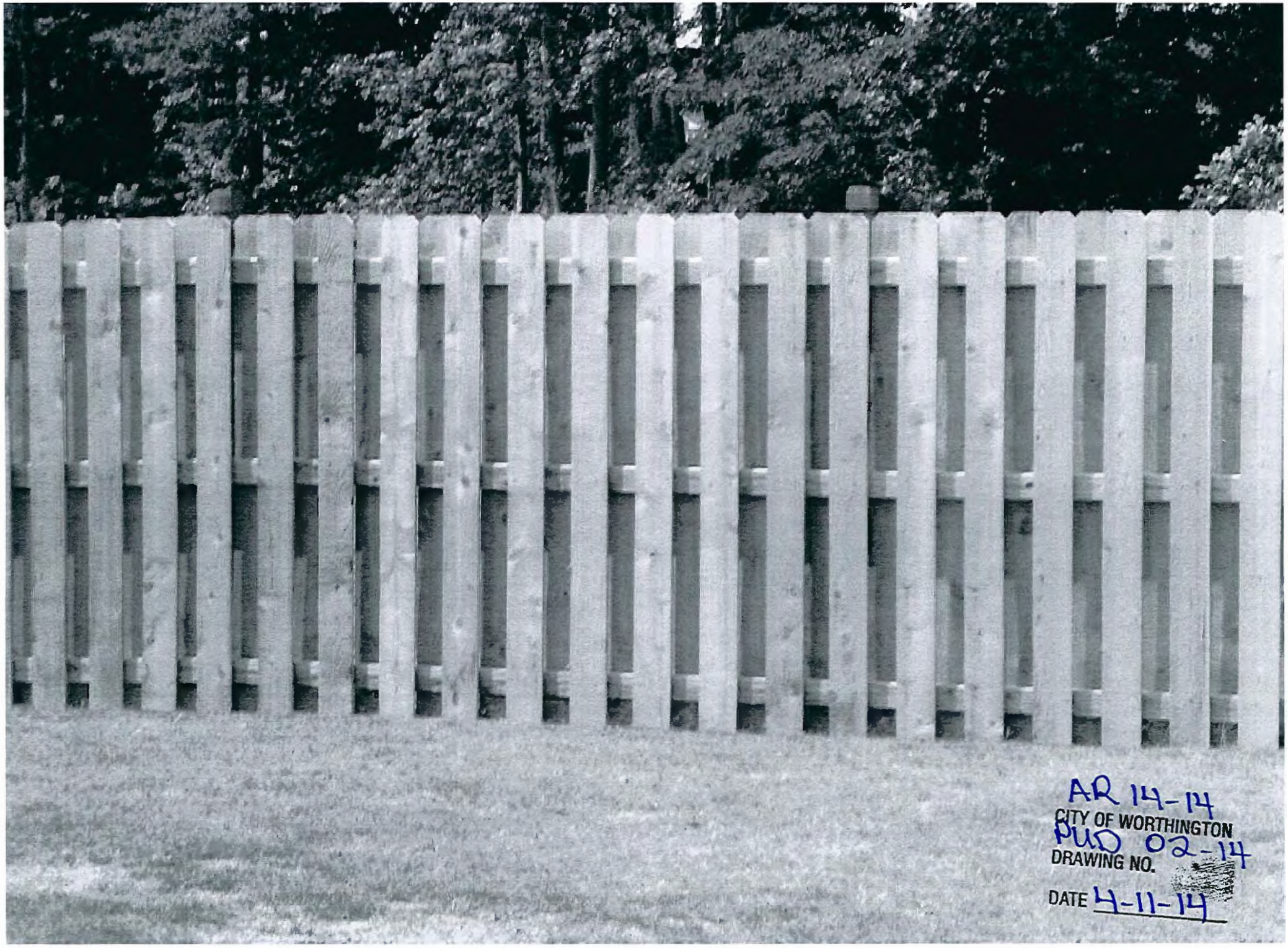

AR 14-14
CITY OF WORTHINGTON
PUD 02-14
DRAWING NO.
DATE 4-11-14

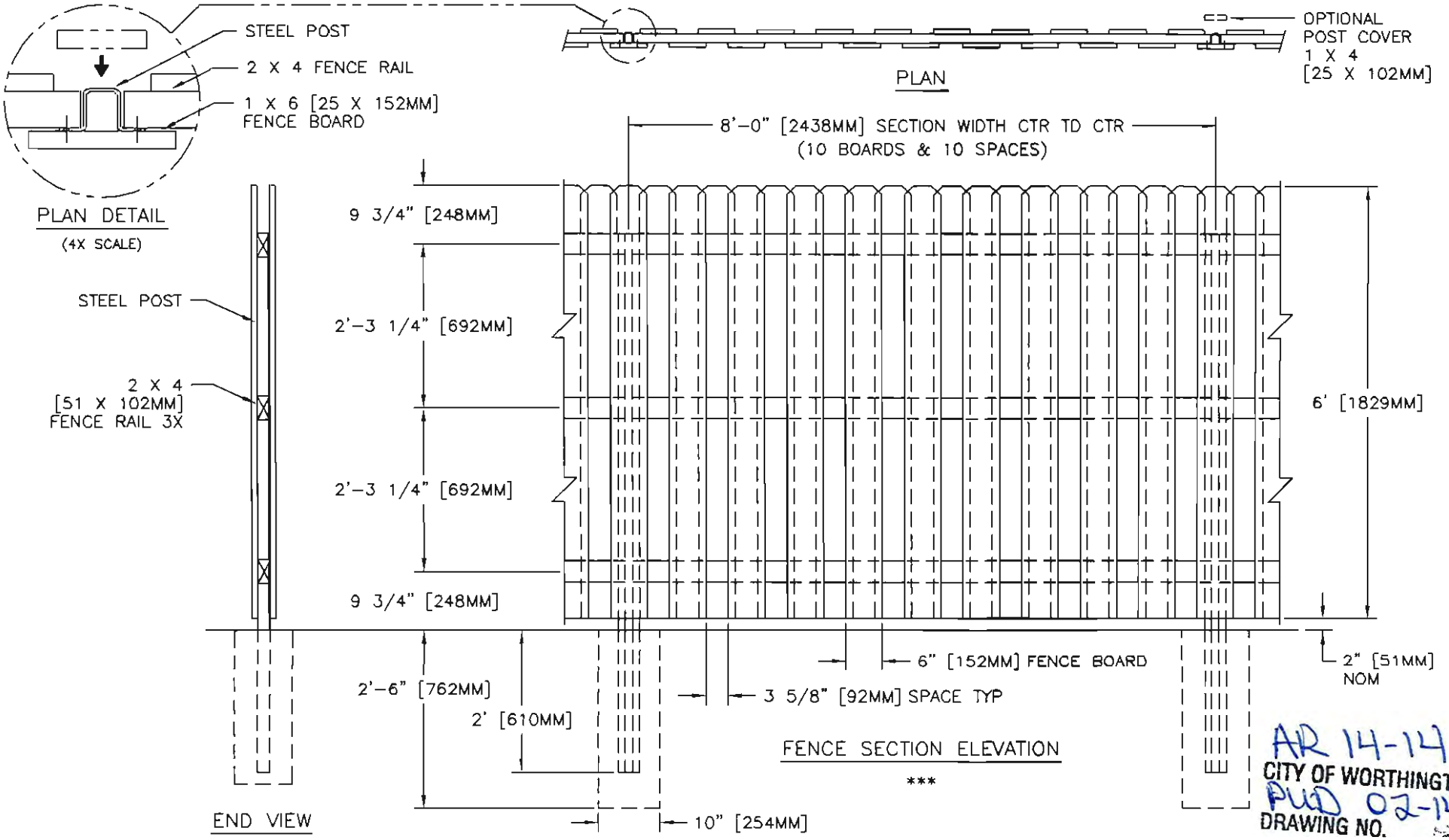

NOTES:
1. METRIC DIMENSIONS ARE NOMINAL EQUIVALENTS TO U.S. DIMENSIONS.
2. SPECIFICATIONS SHOWN CAN BE CHANGED BY MASTER HALCO ONLY.
3. FOOTING WIDTH TO BE 10" [254MM]. MINIMUM DEPTH 30" [762MM].
4. DIMENSIONS SHOWN ARE NOMINAL FOR WOOD.

AR 14-14
CITY OF WORTHINGTON
PUD 02-14
DRAWING NO.
DATE 4-17-14

MASTER HALCO®

COPYRIGHT © 2001-2008 MASTER HALCO, INC.
ALL RIGHTS RESERVED.

POSTMASTER STEEL POSTS
for Wood Fence Systems
by Master Halco
Orange, CA
Phone No.: 800-229-5615
www.FenceOnline.com

6' SHADOWBOX FENCE DETAIL
STYLE: DOG EARED

NOM 6' [1829MM] FENCE HEIGHT
1 X 6 [25 X 152MM] FENCE BOARDS

BY:	JRR	DWG:	10-1110
DATE:	01-25-99		
REV:	E	LAYER:	1
REV DATE:	09-22-06	SCALE:	1/2" = 1'-0"

HIGHLAND
PRODUCTS GROUP LLC

SPEC SHEET : 166-1381

4' SERIES 1468 CAST IRON BENCH *mahogany* Wt. 160 lbs

photo

top view

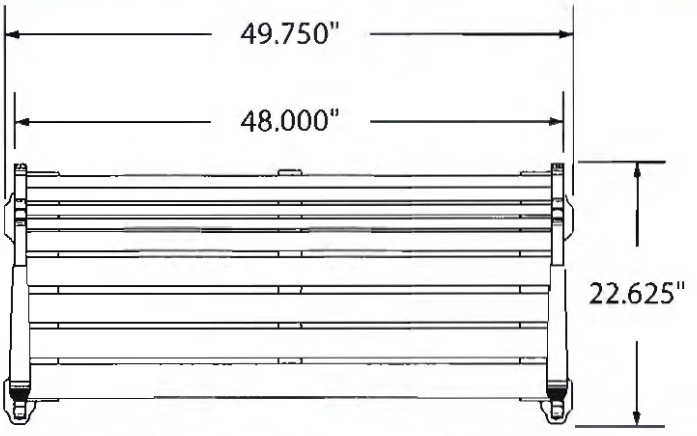

front view

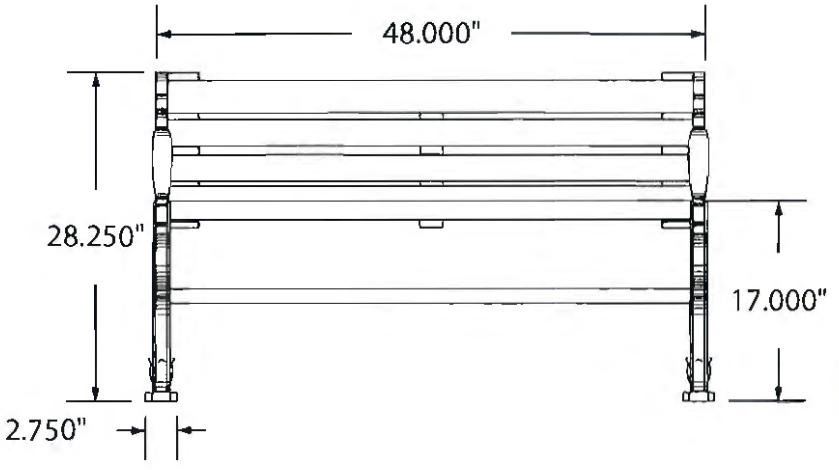

AR 14-14
CITY OF WORTHINGTON
PUD 02-14
DRAWING NO.

DATE 4-11-14

side view

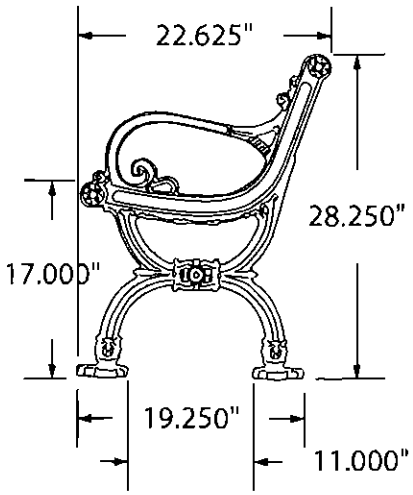

product finish

Wooden Surfaces:
- Seats - Mahogany planks

Construction:
- Heavyweight cast-iron zinc-rich primed, black powder coated under structure
- Nuts, washers and bolts - galvanized steel

mounting types

P = Portable : no mount

SM = Surface Mount:
concrete anchors
through holes in feet

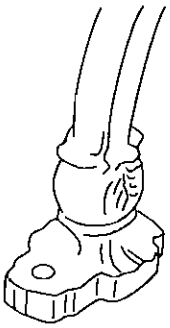

PORTABLE

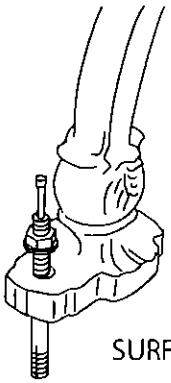

SURFACE MOUNT

AR 14-14
CITY OF WORTHINGTON
PUD 02-14
DRAWING NO.
DATE 4-11-14

HIGHLAND
PRODUCTS GROUP LLC

SPEC SHEET : 166-1381

6' SERIES 1468 CAST IRON BENCH *mahogany* Wt. 180 lbs

photo

top view

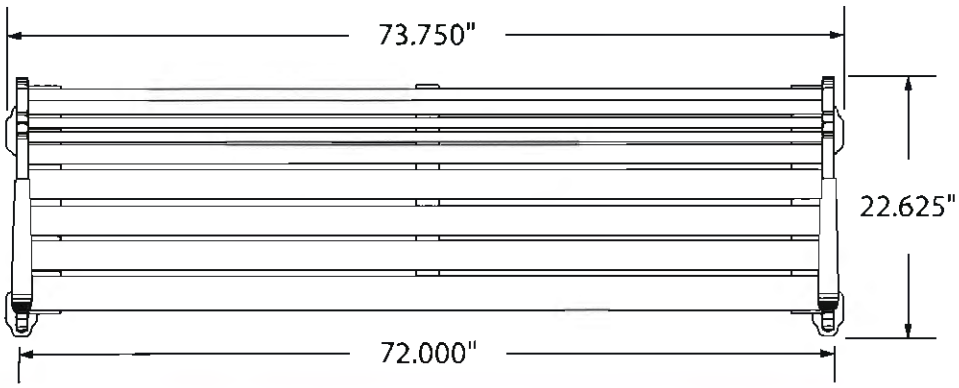

front view

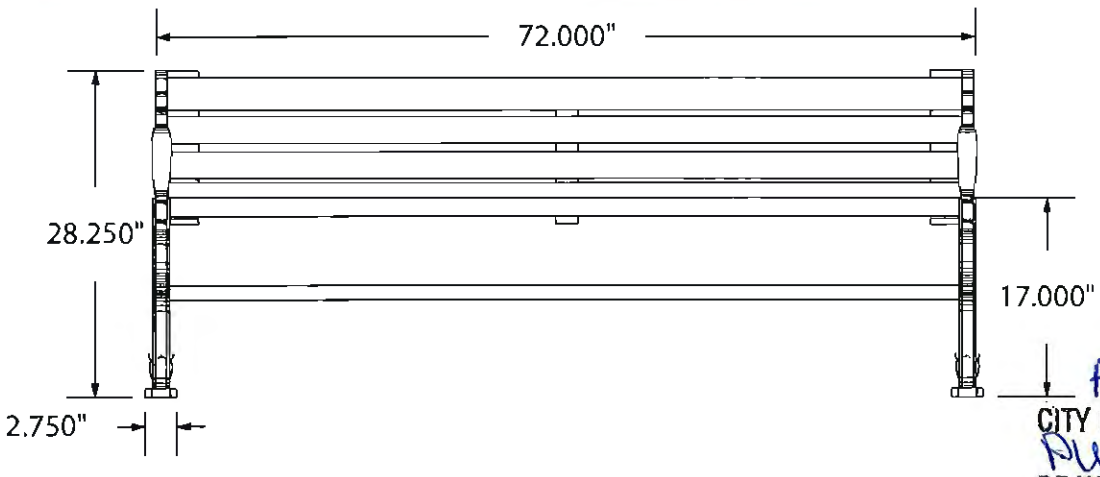

AR 14-14
CITY OF WORTHINGTON
PUD 02-14
DRAWING NO.

DATE 4-11-14

side view

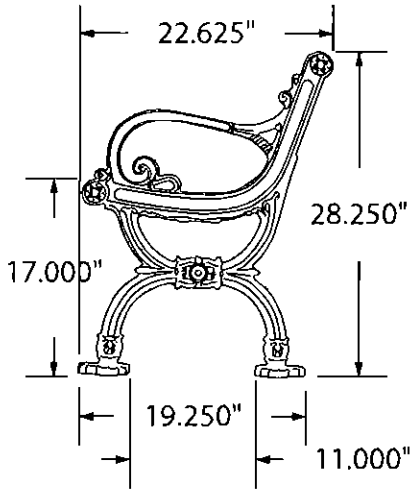

product finish

Wooden Surfaces:
- Seats - Mahogany planks

Construction:
- Heavyweight cast-iron zinc-rich primed, blackpowder coated understructure
- Nuts, washers and bolts - galvanized steel

mounting types

P = Portable : no mount

SM = Surface Mount:
concrete anchors
through holes in feet

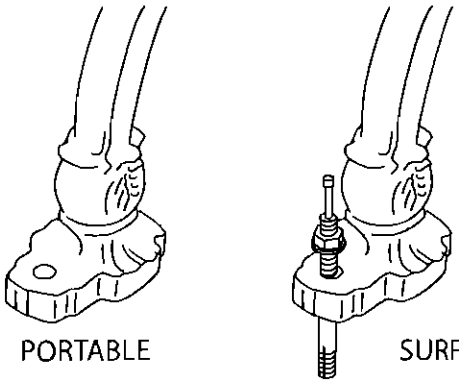

AR 14-14
CITY OF WORTHINGTON
PUD 02-14
DRAWING NO.
DATE 4-11-14

Belmar 3 Tri-Stand Synthetic Teak Outdoor Table Item # HN-GRP139

- Tri foot single column table with stainless steel base
- Synthetic teak wood top in several size and shape options
- Retro-modern base design with sleek, elongated feet
- Cast aluminum base with clear lacquer finish
- Suitable for indoor or outdoor use

- Built with cast iron counter weights in base bottoms
- Table height 29 inches

What's Included

Table Top, Table Base

Full Description

Images

Specifications

Guarantee & Returns

Description

The Belmar 3 Tri-Stand Synthetic Teak Outdoor Table features a cool, retro-modern base design crafted from resilient cast aluminum base and a wood tabletop that resembles teak. The base is the same for all sizes constructed of durable and wether resistant cast aluminum equipped with sealed cast iron counter weights inserted under the base bottoms, with tri foot support. The top is available in square, rectangle, and round versions and in several sizes. Known for its natural resistance to the elements and striking beauty, synthetic teak wood is the ultimate wood for outdoor use. A great table available in various sizes for use indoor or outdoor.

Table top sizes: (subject to availablity)

- Round - 24 in. diameter
- Round - 30 in. diameter
- Round - 36 in. diameter
- Square - 24 x 24 in.
- Square - 30 x 30 in.
- Square - 36 x 36 in.
- Rectangle - 24 x 30 in.
- Rectangle - 30 x 48 in.
- Base dimensions: 23W x 28H inches
- Table attachment: 21W in., Column: 3W in.

AR 14-14
CITY OF WORTHINGTON
PUD 02-14
DRAWING NO.
DATE 4-11-14

BFM Seating PH101CTKSV Largo Stackable Outdoor Teak Chair with Arms - Silver Frame

QUANTITY DISCOUNTS!

Buy 1 or more

$125.99/Each

Buy 12 or more **$120.53/Each**

Available Colors:

AR 14-127
CITY OF WORTHINGTON
PUD 02-14
DRAWING NO.
DATE 4-11-14

- Imitation teak for durability, easy maintenance
- Stackable design for space-saving storage
- 250 lb. weight capacity

Item:	163PH101CTSV
Units:	Each
Ship...	Usually Ships in 5-7 Business Days
MFR ...	PH101CTKSV

Details

BFM Seating's PH101CTKSV Largo stackable outdoor arm chair will bring a bold look to your cafe, outdoor bar or patio! It boasts slat-style back and seat made of synthetic teak wood, supported by a durable silver-colored powder coated aluminum frame. The imitation teak frees you from the hassle of maintaining real wood

and will stand up to the elements for years to come without fading, peeling or graying.

Overall Dimensions:

Height: 33"

Seat: 18 1/2"W x 18"D x 17"H

View all BFM Seating Outdoor Restaurant Chairs

AR 14-14

CITY OF WORTHINGTON

PUD 02-14

DRAWING NO.

DATE 4-11-14

thepark AND FACILITIES CATALOG

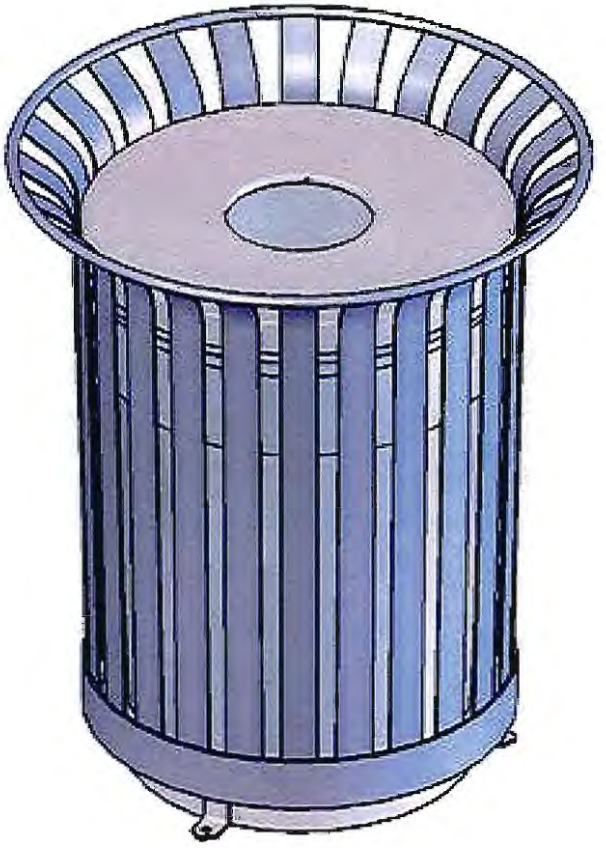

AR 14-14
CITY OF WORTHINGTON
PUD 02-14
DRAWING NO.
DATE 4-11-14

Item #: 398-1024

Vertical Slat Pattern Lexington Receptacle

WARRANTY & TERMS

WARRANTY: 5 Year Limited Warranty on Thermoplastic coated elements. Ultra Play guarantees all items for one full year to be free of defects in workmanship or materials when installed and maintained properly. We agree to repair or replace, any items determined to be defective. Items specifically not covered by this warranty include vandalism, man made or natural disasters, lack of maintenance, normal weathering or wear and tear due to public abuse.

Damages or loss in transit is the responsibility of the carrier, whether visible or concealed. It is the responsibility of the recipient to assure that the order is received complete. Before signing the delivery receipt, inspect the shipment immediately and completely. Note any damages or shortages on the bill of lading. Damage reports must be filed within 10 days. Ultra Play is NOT responsible for damages or loss in transit. Title to all goods passes to the customer at the time of shipment. Ultra Play will assist in filing claims if the freight arrangements were made by Ultra Play at your request.

CANCELLATIONS AND RETURNS: Cancellations are only accepted with approval of Ultra Play. No merchandise shall be returned without a Return Goods Authorization number which is issued by customer service. Any authorized merchandise must be carefully packed and received in saleable condition. A restocking charge of up to 25% will be applied to all returned goods when the error is not the fault of Ultra Play. All returns must be shipped freight prepaid.

AR 14-14
CITY OF WORTHINGTON
PUD 02-14
DRAWING NO.
DATE 4-11-14

- Owners and installers please note these safety warnings and make use of this checklist on a regular basis.
- Follow installation instructions when erecting equipment.
- Ground surfaces around equipment should be restored as needed. Concrete footings should never be exposed. Surface depth should comply with ASTM and CPSC specifications.
- Check for and repair damage caused by wear or vandalism, a major factor in injury causing situations.
- All protruding bolts should be covered or cut off and finished smooth. Sharp edges on pipes should be capped or removed. Check for bent, broken, or severly worn pipe, and replace.
- All equipment should be free of rust and repainted whenever necessary to deter rusting.
- We provide our customers with layout sheets and installation instructions. Please keep on file the specifications sheet that contains the listing of every part used.
- Never add components not intended for use with this product.
- Regular maintenance is necessary in this and all park and recreational equipment to insure the safety of the user.
- Note: Proper maintenance of equipment requires regular tightening of all bolts, nuts, and setscrews.
- Note: Regular checking of all parts, castings, etc. should be made. If a part is broken or worn, it shoud be replaced immediatly.
- Check to be sure all fittings are tight and that bars and pipes do not move.
- Replace all worn S-hooks. S-hooks must be completely closed. Failure to close S-hooks can result in serious injury to the user. NEVER reuse S-hooks.
- Test for free movement of swing hanger and other moving attached parts.
- Check for worn chains and replace them.
- A soft resilient surface should be placed under all swings extending at least twice the height of the top rail both front and back.

AR 14-14
CITY OF WORTHINGTON
PUD 02-14
DRAWING NO.
DATE 4-11-14

PRODUCT SPECIFICATIONS

LX-36
36 GALLON TRASH RECEPTACLE

Material: Sides are fabricated with 2" x 11 gauge steel flat plate. Top rings are 5/8" rod. Bottom rings are 3" x 7 gauge steel flat plate. Bottom plate fabricated from 11 gauge sheet steel precision punched. Surface mount feet are laser cut from 7 ga steel plate. All electrically MIG welded.

Receptacle Coating: TGIC electrostatic powder coated application oven cured.

Receptacle Dimensions: 31 1/2" diameter x 37-3/4" high x 36 gallon capacity.

Hardware: Mounting hardware not included.

FTR-32-08
32 GALLON FLAT TOP

Material: Top plate shall be fabricated from 18 gauge steel flat, spun to form. Outside shall have a 1" radius.

Coating: Oven fused functionalized polyethylene copolymer-based thermoplastic. Fluidized bed coating application with superior mechanical performance, impact resistance and UV-stability.

Receptacle Dimensions: Center opening shall be an 8" inside diameter. The overall dimensions shall be 24" diameter x 2" high.

32 Gallon Liner: Made of heavy duty plastic.

Overall Dimensions Including Top: 31-1/2" in diameter x 37-3/4" high x 36 gallon capacity.

AR 14-14
CITY OF WORTHINGTON
PUD 02-14
DRAWING NO.
DATE 4-11-14

OVERALL DIMENSIONS

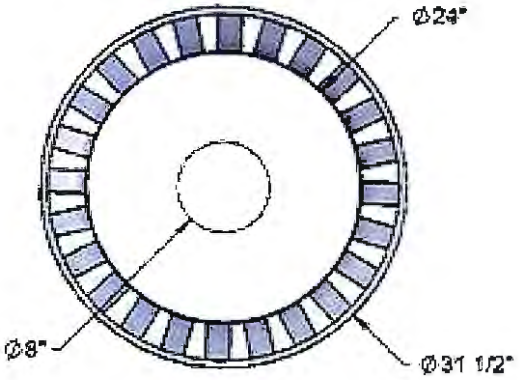

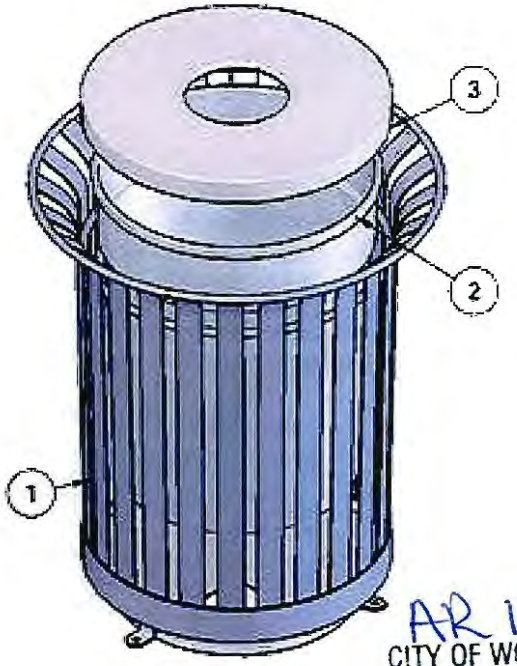

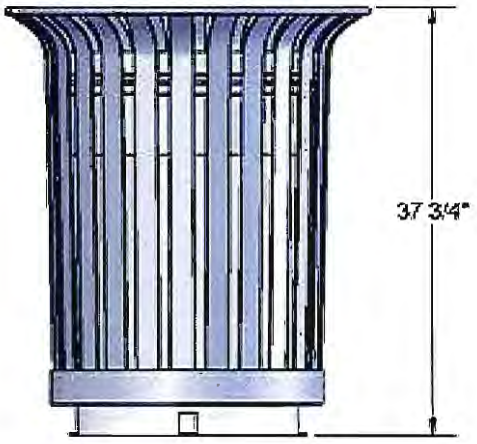

AR 14-14
CITY OF WORTHINGTON
PUD 02-14
DRAWING NO.
DATE 4-11-14

Optional Surface Mount Hardware:
3/8" x 3-1/2" Concrete Expansion Anchor Bolts
(Not Included)

ITEM NO.	PartNo	DESCRIPTION	QTY
1	LX-36	LX Gallon Trash Receptacle	1
2	PL-32	32 Gal. Liner	1
3	FT	Flat Top	1

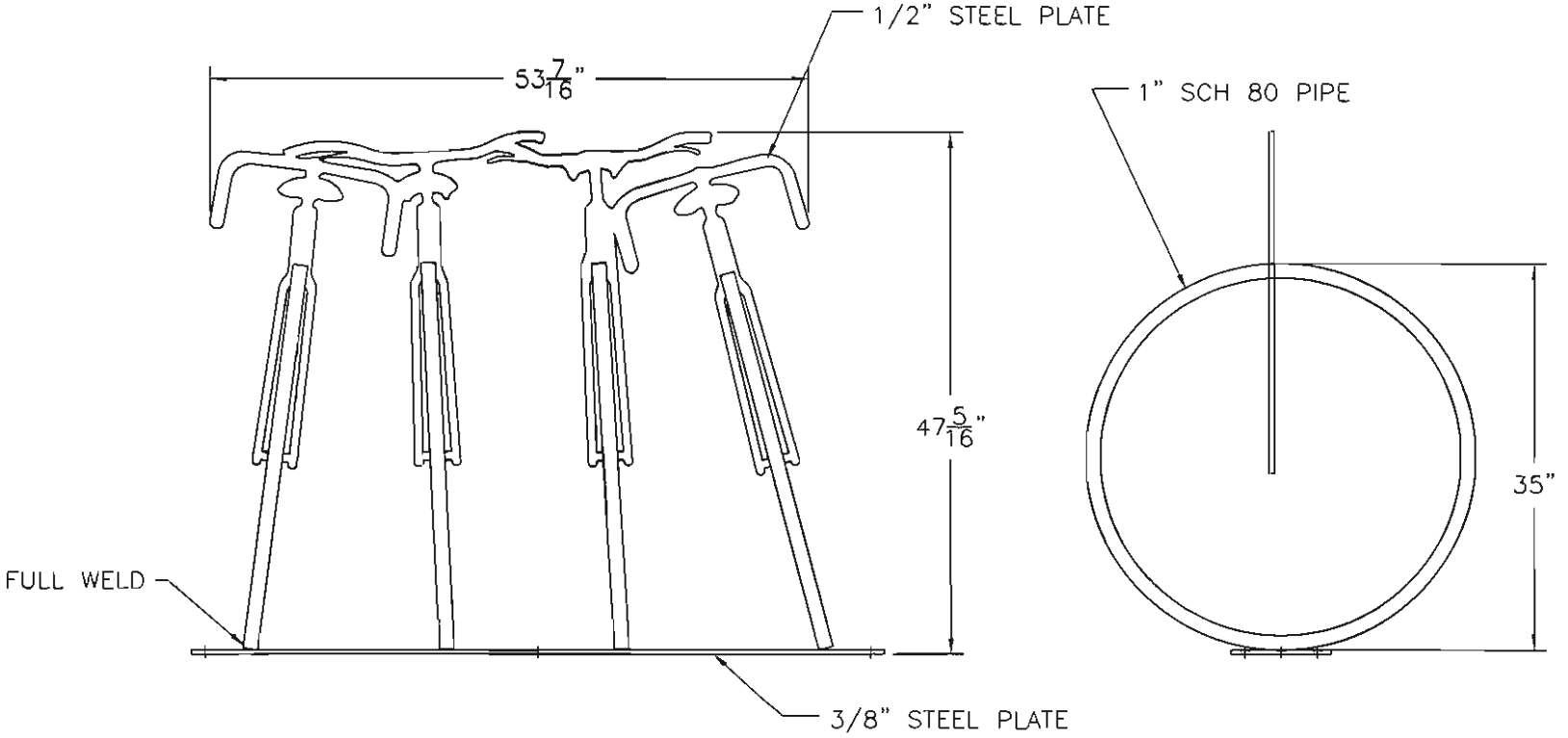

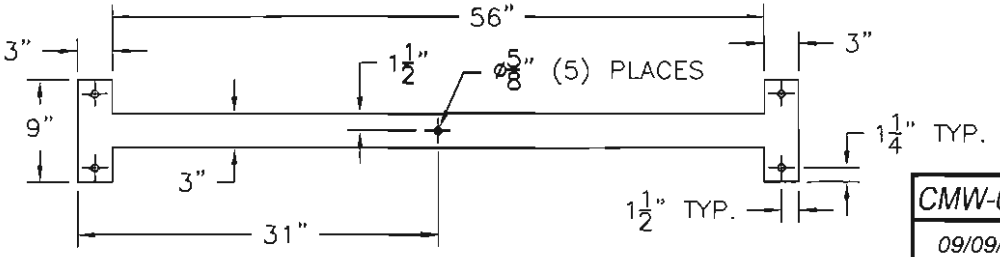

AR 12-12
CITY OF WORTHINGTON
PUD 02-12
DRAWING NO.
DATE 4-11-12

CMW-0113	LBR 4	CREATIVE METAL WORKS LLC DAYTON OREGON
09/09/05		
CHANGE / SCALE 3/4"=1'-0"	WEIGHT 140 LBS	

THIS DRAWING IS THE PROPERTY OF CREATIVE METAL WORKS LLC. AND MAY NOT BE DUPLICATED DISCLOSED OR USED FOR MANUFACTURING WITHOUT THE PRIOR WRITTEN PERMISSION FROM CREATIVE METAL WORKS LLC. UNDER PENALTY OF LAW

AR 127-14
CITY OF WORTHINGTON
PUD 02-14
DRAWING NO.

DATE 4-11-14

InSite

PROJECT NAME

Municipal Plan Commission/ Architectural Review Board

Worthington, OH

FRESH THYME FARMERS MARKET

PROJECT NO.

Worthington, OH

ISSUE DATE

April 18, 2014

The Fresh Thyme Farmers Market Concept

Fresh Thyme Farmers Market is a newly formed company on a mission to bring the "Farmers Market" concept to the Midwest. The Fresh Thyme Farmers Market stores will offer "Healthy Food at Healthy Values", making fresh and natural food more attainable to the masses. An extensive signature "farmers market" fresh produce department is the nucleus of the store, featuring refreshingly low prices on local and organic fruits and vegetables. To round out a healthy shopping experience, the full-service departments offer freshly baked goods, healthy deli food to grab and go and natural meats and seafood. A Fresh Thyme shopping trip isn't complete without perusing through hundreds of bulk food bins, discovering new healthy dairy, frozen and grocery items, and selecting natural body care products and vitamins to supplement your healthy lifestyle.

Benefits to local communities:

- Typical new store creates 75-90 direct jobs
- Fresh, convenient and value advantages over conventional consumer grocery options
- Creates additional secondary jobs which support local farmers, suppliers and vendors
- Company strives to become an employer of choice in the local community
- Supports local community not-for-profit organizations
- Supports local schools with designated programs
- Offers free educational classes, tasting events and entertainment
- Business is built on a culture of farmer-friendly customer service with knowledgeable team members
- Implements green building initiatives and operational practices

Proven and highly successful concept:

- Farmer's Market concept has proven viability in western states
- Appeals to a larger customer base, the "cross-over" shopper, as opposed to the "natural food" shopper.
- One of the fastest growing segments of the grocery industry

Proven and experienced management team:

- Over twenty years of leadership experience in the "farmer's market" segment of the natural foods retail category
- Passionate and focussed management team

Healthy Food. Healthy Values.

AR 14-14
CITY OF WORTHINGTON
PUD 02-14
DRAWING NO.
DATE 4-11-14

InSite

PROJECT NAME
Municipal Plan Commission/ Architectural Review Board
Worthington, OH

FRESH THYME FARMERS MARKET

SHEET TITLE
DESIGN CONCEPT

PROJECT
Worthington, OH

ISSUE DATE
April 18, 2014

SCALE
AS NOTED

SHEET
2

Meet the Fresh Thyme team

Chris Sherrell
President and Chief Executive Officer

Chris Sherrell, our President and Chief Executive Officer, founded Fresh Thyme Farmers Markets in 2012 to offer the Midwest a new healthy and fresh grocery shopping experience. Chris began his career in the grocery business as a teenager and has spent over 20 years in the natural food and farmers market segments of retail. Most recently Chris led Sunflower Farmers Markets as President and Chief Executive Officer. Under Chris' leadership Sunflower employed over 3,000 team members, grew from one store to 44 stores throughout eight Southwestern states and then went on to merge with Sprouts Farmers Market. Chris has in-depth experience in almost every facet of the natural and farmers-market grocery business which he gained during his years at Wild Oats Markets and Sunflower Farmers Markets. Prior to his role as President and CEO at Sunflower, Chris held the position of Chief Operating Officer and led all aspects of operations, purchasing, sales, merchandising & marketing, as well as holding executive roles and a seat on the Board of Directors for Sunflower. Chris has a passion for developing a strong company culture with a positive team who has similar values.

Jim McCloskey
Chief Financial Officer

Jim McCloskey, our Chief Financial Officer, brings over 25 years of leadership experience at high-profile companies, including Sunflower Farmers Markets, Red Robin Gourmet Burgers, Avalon Software and Famous Amos Cookies.
Most recently at Sunflower, Jim held the Chief Financial Officer position and led the Real Estate and Construction teams. Jim has experience taking companies public, (Red Robin Restaurants), and has extensive knowledge of both public and private sectors. As a CFO, Jim has always been focused on companies' growth, increasing sales, introducing strategic company initiatives and improving execution.

Sage Horner
SVP of Merchandising & Marketing

Sage Horner, our Senior Vice President of Merchandising and Marketing, has over 25 years of Merchandising and Procurement experience in the Grocery industry, four of which in the Farmer's Market segment.

Sage held the Vice President of Merchandising, Marketing & Supply Chain position at Sunflower Farmers Market, where he oversaw all aspects of sourcing, procurement, private label, pricing, marketing and distribution for Sunflower's 44 stores throughout eight Southwestern states. Previously, Sage spent over 20 years with Albertsons and Supervalu, where he held Director level positions leading Strategic Sourcing and Procurement efforts for the companies.

Fran Windsor
Vice President of Legal

Fran Windsor is the Vice President, General Counsel and Secretary of the Company. She has over 25 years of legal experience and joins us from Sunflower, where she served as General Counsel for several years and prior to that as outside legal counsel for Sunflower.
She has extensive experience in the commercial real estate world and has represented companies of all sizes in-house and as outside counsel in a broad range of business areas, including commercial leasing, finance, acquisitions, mergers, licensing, and dispute resolution. She began her legal career in the Phoenix based office of Quarles & Brady LLP.

Tracy Lindsey
Vice President of Construction

Tracy Lindsey, our Vice President of Construction, has over 20 years of development and construction experience for grocery stores and restaurants, five of which for Wild Oats and Henry's Farmers Market.
Tracy has strengths in design, is a Certified Supermarket Designer, and has in-depth knowledge of commercial LEED building practices. In addition to Wild Oats and Henry's, Tracy has held construction leadership positions with United Supermarkets, Ruth's Chris, Fleming and SuperValu.

Dave Bernier
Director of Operations

Dave Bernier, our Director of Operations, has over 30 years of grocery experience, 15 of which in the natural food and farmers market segments.
Dave has held a variety of leadership operational roles at Edward's Food Stores, Shaw's Supermarkets, Wild Oats Markets and most recently at Sunflower Farmers Markets, as Director of Store Operations. Dave is passionate about creating a happy and upbeat workplace for team members and is fanatical about offering friendly service for our guests.

Jeff Gernand
Director of Meat and Seafood

Jeff Gernand, our Director of Meat and Seafood, has over 20 years of experience in the grocery industry, most of which in the natural food and farmers market segments. Most recently Jeff held the position of Meat and Seafood Category Manager, where he was responsible for purchasing, sales, marketing, vendor management, policies and procedures. Prior to his time with Sunflower, Jeff held a variety of roles at Wild Oats Markets, Reay's Ranch Market and Smith's Food and Drug.

Justin Haasch
Director of Real Estate and Market Research

Justin Haasch, our Director of Real Estate and Market Research, joined us from Sunflower Farmers Market where he held the role of Business Analyst with a focus on research within the Real Estate department. Justin earned a Master's Degree in his field of site analytics, demographic/statistical analysis, strategic retail growth and financial analysis. With a five year history on the development side of retail, he has valuable experience with site analytics for retailers, multifamily and hospitality, modeling various national grocers, retail and specialty retailers for development teams.

AR 14-14
CITY OF WORTHINGTON
PUBS 02-14
DRAWING NO.
DATE 4-11-14

InSite

PROJECT NAME
Municipal Plan Commission/ Architectural Review Board
Worthington, OH

FRESH THYME FARMERS MARKET

SHEET TITLE
MANAGEMENT TEAM

PROJECT
Worthington, OH

ISSUE DATE
April 18, 2014

SCALE
AS NOTED

SHEET
3

Site and Technical Information

The proposed location for this store is 933 High Street.

The following represents the anticipated business operations for this store:

Proposed hours of operation: 7:00AM to 10:00 PM.
Anticipated peak hours (busiest hours): 4:00PM to 7:00PM.
Anticipated number of patrons on a daily basis: 1400.
Anticipated number of patrons during the peak hours: 375.
Total anticipated number of employees: 100.
Maximum number of employees working at one time: 30.
Hours for deliveries: 7:00AM to 7:00PM.
The compactor will be used multiple times throughout the course of an average day. Fresh Thyme agrees to limit compactor operations will be limited to 7:00AM until 7:00PM.
Anticipated number of truck deliveries per day: On average, 2 eighteen wheelers and 5 small trucks per day.

Healthy Food. Healthy Values.

AR 124-14
CITY OF WORTHINGTON
PUD 02-14
DRAWING NO.
DATE 4-11-14

InSite

PROJECT NAME
Municipal Plan Commission/ Architectural Review Board
Worthington, OH

FRESH THYME FARMERS MARKET

SHEET TITLE
SITE AND TECHNICAL INFORMATION

PROJECT
Worthington, OH

ISSUE DATE
April 18, 2014

SCALE
AS NOTED

SHEET
4

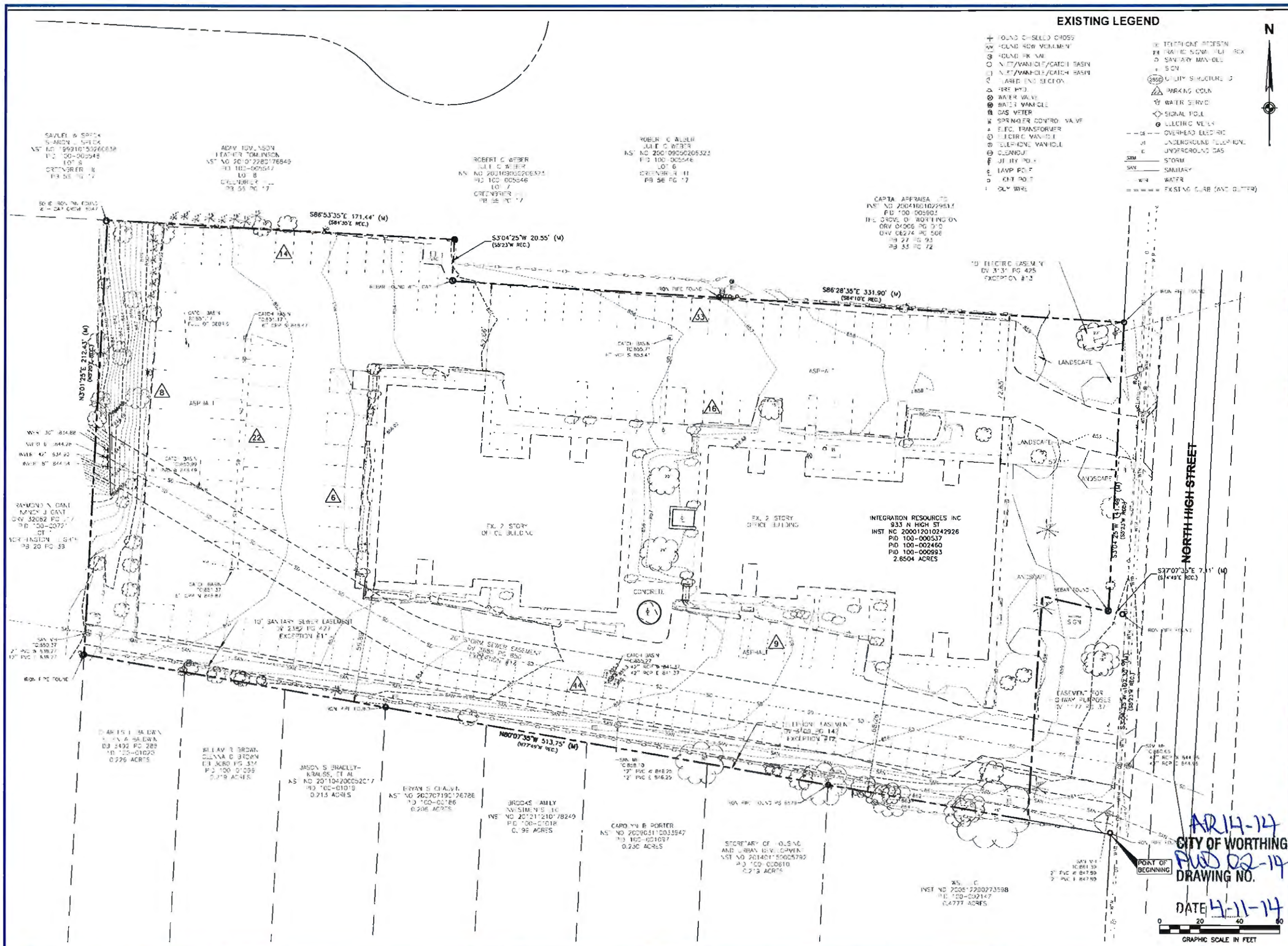

InSite

PROJECT NAME

Municipal Plan Commission/ Architectural Review Board

Worthington, OH

FRESH THYME FARMERS MARKET

SHEET TITLE

EXISTING SURVEY

PROJECT

Worthington, OH

ISSUE DATE

April 18, 2014

SCALE

AS NOTED

SHEET

5

AR14-14

CITY OF WORTHINGTON

PUD 02-14

DRAWING NO.

DATE 4-11-14

InSite

PROJECT NAME

Municipal Plan Commission/ Architectural Review Board

Worthington, OH

FRESH THYME FARMERS MARKET

SHEET TITLE

SITE SATELLITE VIEW

PROJECT

Worthington, OH

ISSUE DATE

April 18, 2014

SCALE

AS NOTED

SHEET

6

SITE LEGEND

- INDICATES LIGHT DUTY PAVEMENT
- INDICATES HEAVY DUTY PAVEMENT
- INDICATES CONCRETE SLABS/SIDEWALK
- LIGHT POLE/FIXTURE, WALL FIXTURE
- (10) PARKING COUNT

SITE KEY NOTES

1. STOP SIGN, R1-1
2. STOP LINE (24"), WHITE
3. ACCESSIBLE PARKING SYMBOL
4. ACCESSIBLE PARKING SIGN
5. PAINT 4" WIDE STRIPES @ 2'-0" O.C. @ 45° ANGLE, TRAFFIC YELLOW PAINT
6. PROPOSED SIDEWALK
7. ACCESSIBLE RAMP (SEE DETAIL 2/C502)
8. BEGIN/END PROPOSED CURB AND GUTTER. SAWCUT EXISTING CURB TO PROVIDE CLEAN CONSTRUCTION JOINT.
9. ACC. PARKING SPACES & THEIR ACCESS AISLES SHALL BE 2% MAX. SLOPE IN ALL DIR.
10. PAINT 4" WIDE STRIPE, TRAFFIC YELLOW PAINT
11. PROPOSED CROSSWALK

SITE NOTES

1. ALL DIMENSIONS, RADII AND COORDINATES ARE TO BACK OF CURB WHERE APPLICABLE. ALL RADII ARE 3.5' UNLESS INDICATED OTHERWISE.
2. ALL PAVEMENT MARKING SHALL BE YELLOW IN COLOR UNLESS INDICATED OTHERWISE.

SITE DATA

SITE AREA:	2.65 ACRES (APPROX.)
EXISTING ZONING:	C-3
PROPOSED ZONING:	PUD
BUILDING AREA:	28,800 SF
PARKING SPACES PROVIDED:	117
ACCESSIBLE SPACES REQUIRED:	5
ACCESSIBLE SPACES PROVIDED:	5

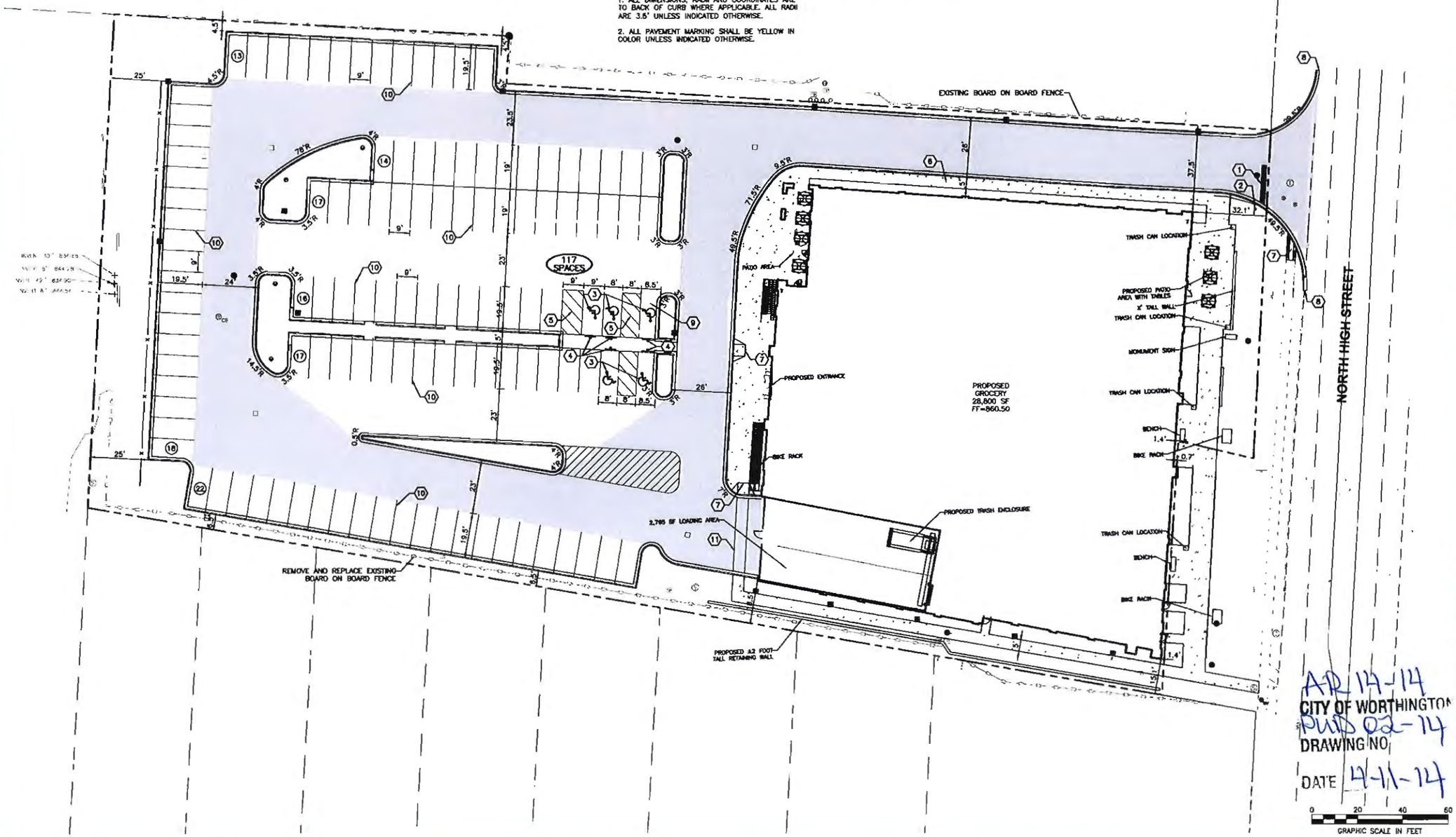

AR 14-14
CITY OF WORTHINGTON
PUD 02-14
DRAWING NO.
DATE 4-11-14

InSite

PROJECT NAME
Municipal Plan Commission/ Architectural Review Board
Worthington, OH

FRESH THYME FARMERS MARKET

SHEET TITLE
SITE PLAN

PROJECT
Worthington, OH

ISSUE DATE
April 18, 2014

SCALE
AS NOTED

SHEET
7

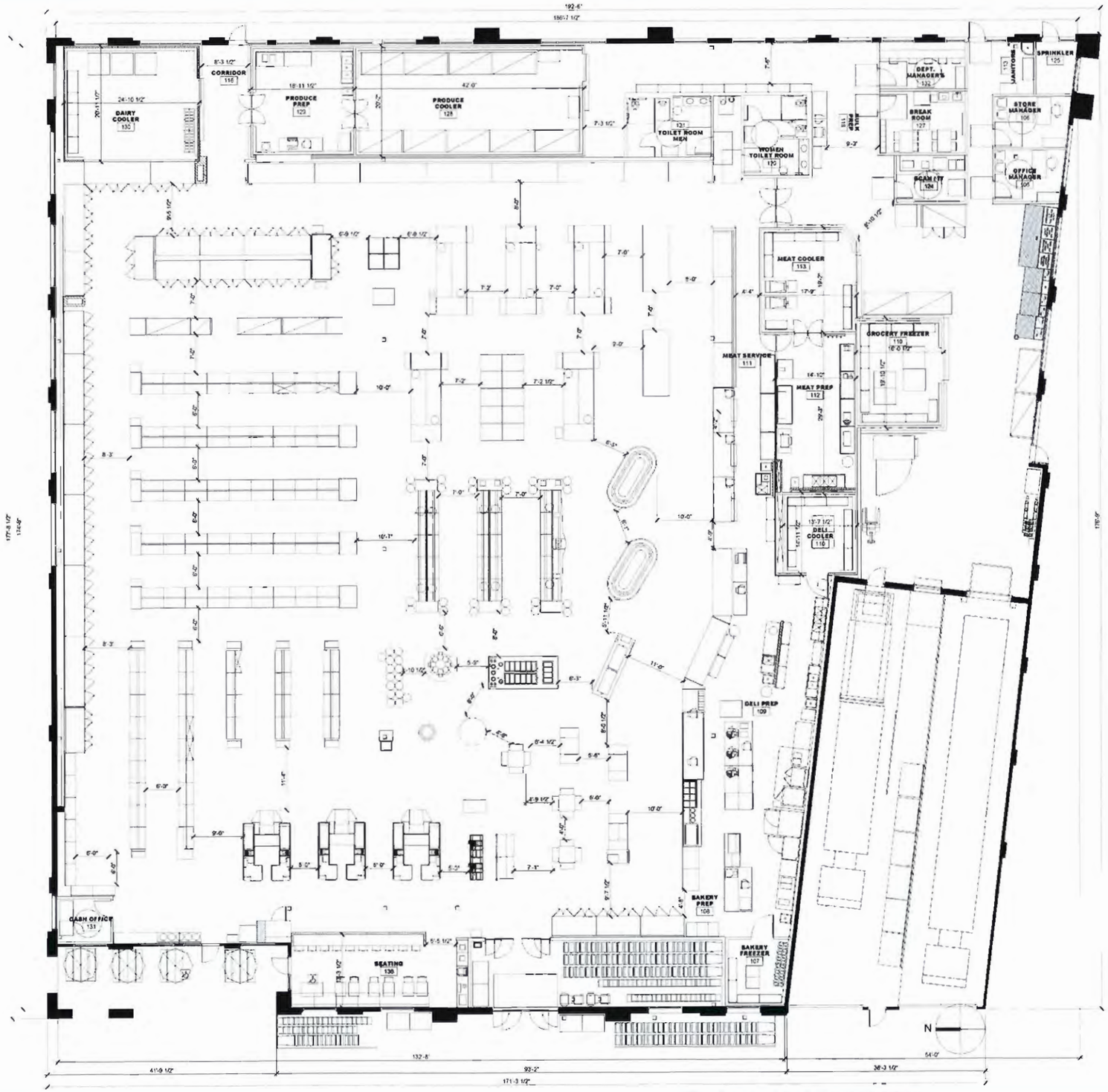

FLOOR PLAN / MERCHENDISE PLAN

Scale: 1/8" = 1'-0"

AR 17-14

CITY OF WORTHINGTON

PUD 02-14

DRAWING NO.

DATE 4-11-14

InSite

PROJECT NAME

Municipal Plan Commission/ Architectural Review Board

Worthington, OH

FRESH THYME FARMERS MARKET

SHEET TITLE

INTERIOR FIXTURE PLAN

PROJECT

Worthington, OH

ISSUE DATE

April 18, 2014

SCALE

3/64"=1'-0"

SHEET

8

NORR
ARCHITECTS ENGINEERS PLANNERS
719 Griswold Street
Suite 1000
Detroit, MI 48226
www.norr.com

AR 14-14
CITY OF WORTHINGTON
PUD 02-14
DRAWING NO.
DATE 4-17-14

InSite

InSite

PROJECT NAME
Municipal Plan Commission/ Architectural Review Board
Worthington, OH

FRESH THYME FARMERS MARKET

SHEET TITLE
FRONT AND REAR EXTERIOR ELEVATIONS

PROJECT
Worthington, OH

ISSUE DATE
April 18, 2014

SCALE
AS NOTED

SHEET
9

HIGH STREET - PERSPECTIVE LOOKING SOUTH -WEST

FRESH THYME MARKET, 933 HIGH STREET, WORTHINGTON, OH.

NORR
ARCHITECTS ENGINEERS PLANNERS
719 Griswold Street
Suite 1000

InSite
AR 14-14
CITY OF WORTHINGTON
PUD 02-14
DRAWING NO.
4-11-14
DATE

InSite

PROJECT NAME
Municipal Plan Commission/ Architectural Review Board
Worthington, OH

FRESH THYME FARMERS MARKET

SHEET TITLE
RENDERING

PROJECT
Worthington, OH

ISSUE DATE
April 18, 2014

SCALE
AS NOTED

SHEET
10

NOTE:
TABLES SHOWN ARE FOR INFORMATIONAL PURPOSES ONLY. TABLES WILL BE FINISHED IN GREEN AND WILL HAVE UMBRELLA HOLES IN THE CENTER.

Green

ADA PICNIC TABLE (BENCH ON ONE SIDE ONLY)

- TABLE TOPS AND SEATS FINISHED IN RECYCLED PLASTIC LUMBER
- NATURAL ALUMINUM
- BOARDS FINISHED IN GREEN COLORATION
- STAINLESS STEEL HARDWARE
- TOP WIDTH 33 ½"
- HEIGHT 30"
- SEAT WIDTH 11"
- SEAT HEIGHT 20"
- OVERALL WIDTH 64 ½"
- OVERALL LENGTH 72"

TABLES COMPLY WITH ADA REQUIREMENTS:
19" KNEE CLEARANCE DEPTH. A MINIMUM CLEAR WIDTH OF 30" AND A MINIMUM HEIGHT OF 27".

CONTACT:

SCOTT MILLER
518-864-5053 (CELL)
SRM PRODUCTS
WWW.ADIRONDACKCHAIRS4SALE.COM

NON-ADA PICNIC TABLE (BENCH ON BOTH SIDES OF TABLES)

- SAME SPECIFICATIONS AS ADA PICNIC TABLE

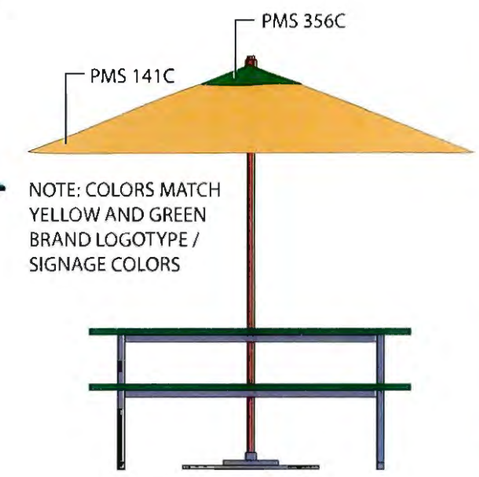

NOTE: COLORS MATCH YELLOW AND GREEN BRAND LOGOTYPE / SIGNAGE COLORS

DESIGN INTENT

UMBRELLA

- 8' SQUARE COMMERCIAL GRADE UMBRELLA
- UMBRELLA 250C SERIES

COMMERCIAL GRADE WOOD UMBRELLA FEATURES SURLAST FABRIC, MAKING IT MILDEW AND UV RESISTANT. IT HAS A 2 PIECE POLE WITH 2" DIAMETER, 8 1/2" EXTRA STRONG RIBS, DELUXE PULLEY OPEN SYSTEM AND SINGLE WIND VENT. BASES SOLD SEPARATELY.

WWW.PBPGLOBAL.COM

AR 14-14
CITY OF WORTHINGTON
PUD 02-14
DRAWING NO.
4-11-14
DATE

InSite

PROJECT NAME
Municipal Plan Commission/ Architectural Review Board
Worthington, OH

FRESH THYME FARMERS MARKET

SHEET TITLE
OUTDOOR SEATING AREA AMENITIES

PROJECT
Worthington, OH

ISSUE DATE
April 18, 2014

SCALE
1/8"=1'-0"

SHEET
11

NOTE:
FIELD BINS WILL BE MOVED INSIDE THE STORE AT CLOSING AND BROUGHT OUT THE NEXT MORNING AT THE STORE OPENING.

FINISH SCHEDULE:

W-3	3/4" ABC PLYWOOD "BURNED" w/CLEAR COAT
PT-1	BLACK PAINT

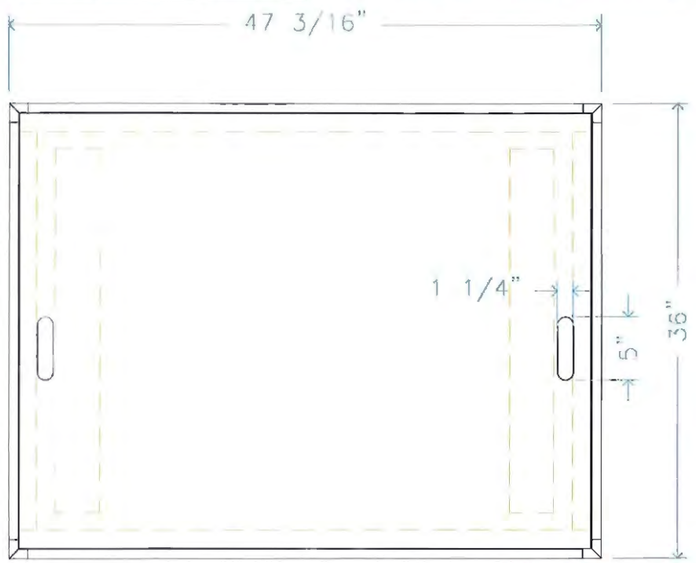

TOP VIEW

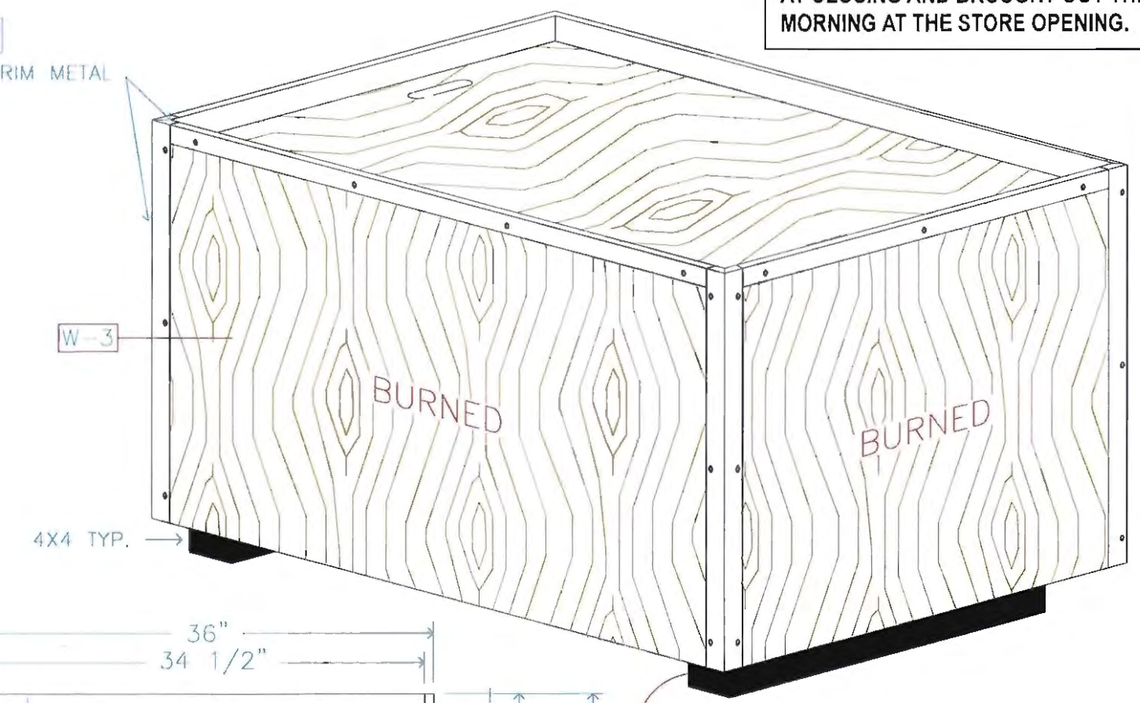

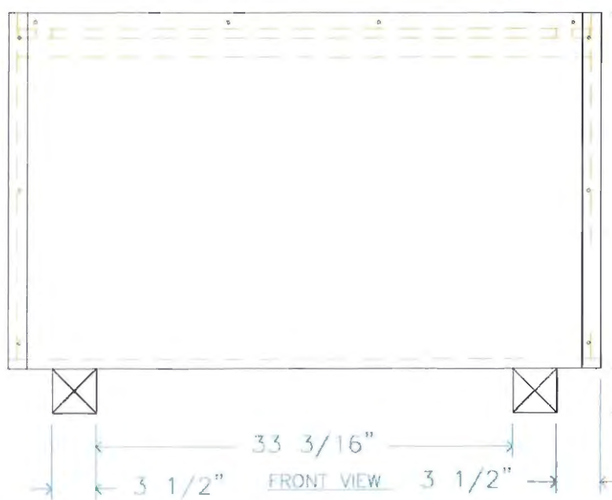

FRONT VIEW

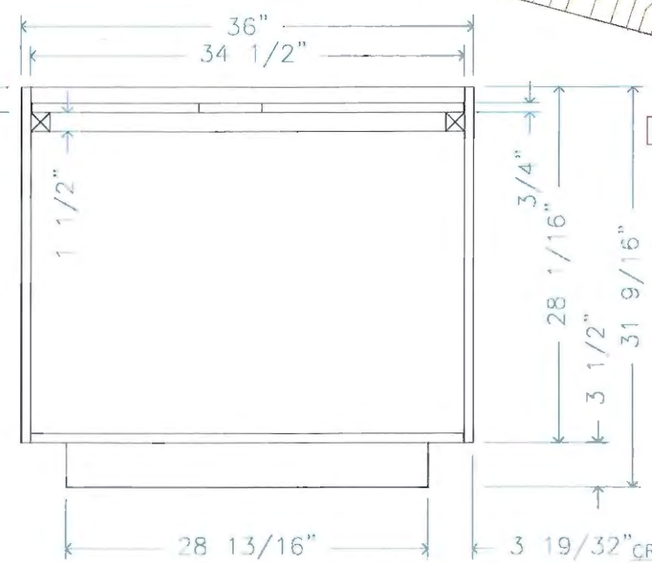

CROSS SECTION

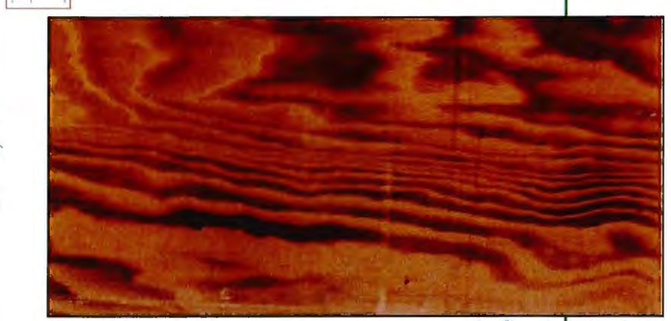

BURNED PLYWOOD FINISH EXAMPLE

AR14-14
CITY OF WORTHINGTON
PUD02-14
DRAWING NO.
DATE 4-11-14

CTA FIXTURES, INC.
5721 E. Santa ana st. #B
Ontario, CA. 91761
TEL: (909) 390-6744
FAX: (909) 390-6746

TITLE: FTP-26 FIELD BIN 3' X 4'

DWG BY:	SCALE:	DATE:		FILE NUM:
CN	N.T.S.	08/13/2013		FTP-26
REV.				SHEET NO. 1 OF 1

InSite

PROJECT NAME
Municipal Plan Commission/ Architectural Review Board
Worthington, OH

FRESH THYME FARMERS MARKET

SHEET TITLE
OUTDOOR SALES AREA AMENITIES

PROJECT
Worthington, OH

ISSUE DATE
April 18, 2014

SCALE
1/8"=1'-0"

SHEET
12

DETAIL: CART CORRAL SIGN PANEL
Scale: NTS

NOTE:
1. REMOVE ALL BURRS AND SHARP EDGES.
2. SEE SHEETS 3 THROUGH 6 FOR INSTALLATION GUIDE.

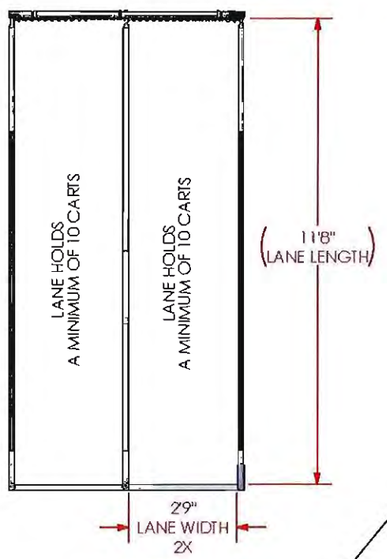

TOP VIEW

DETAIL D
SCALE 1 : 5

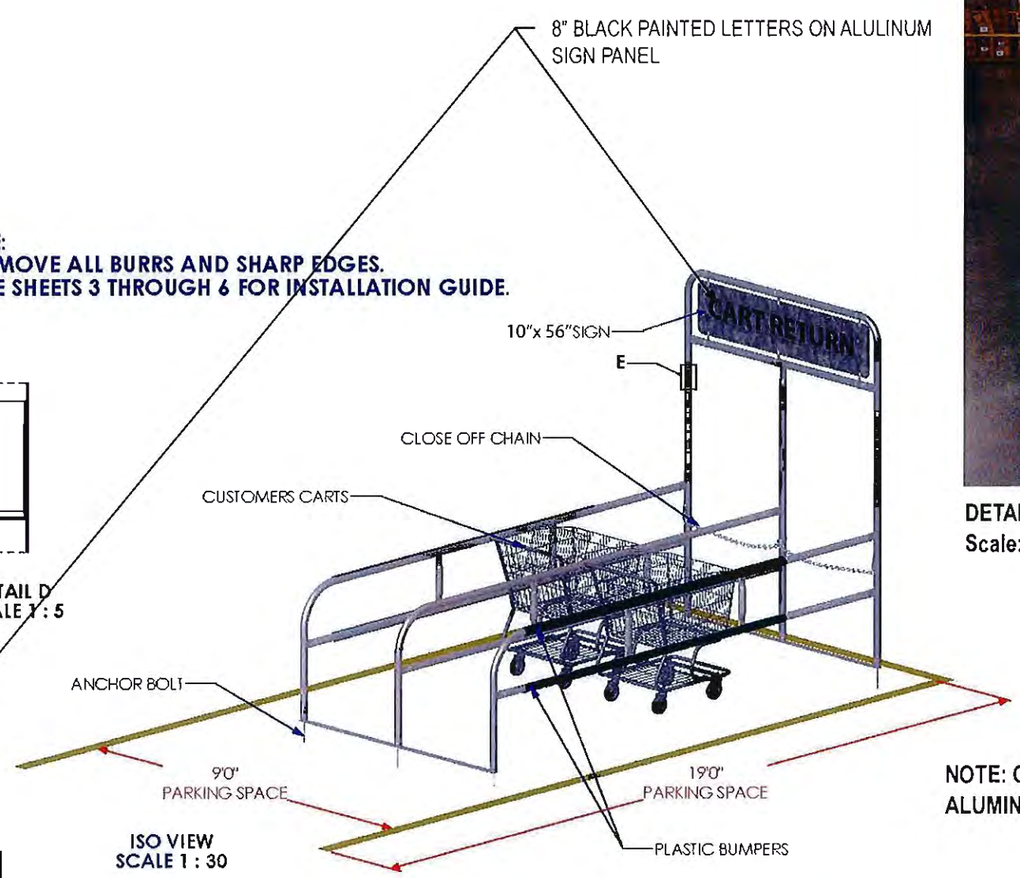

ISO VIEW
SCALE 1 : 30

DETAIL: CART CORRAL MATERIAL EXAMPLE
Scale: NTS

NOTE: CART CORRAL MATERIALS TO BE MILL FINISH ALUMINUM U.N.O.

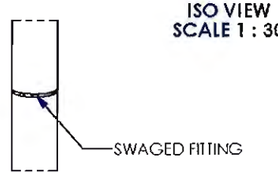

DETAIL E
SCALE 1 : 5

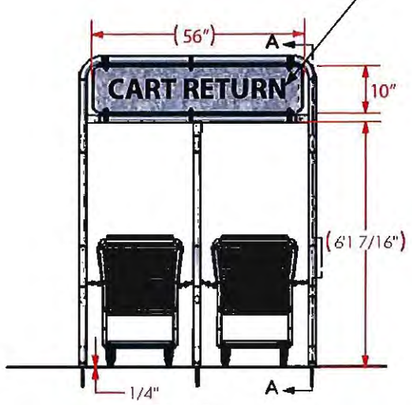

FRONT VIEW

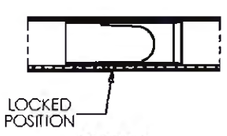

DETAIL B
SCALE 1 : 5

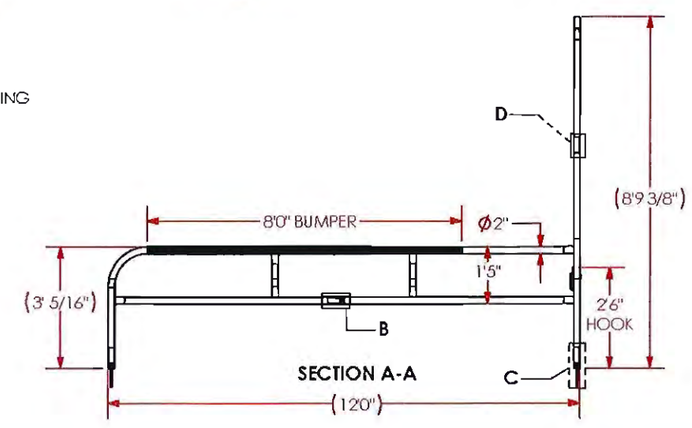

SECTION A-A

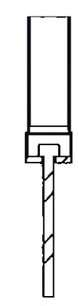

DETAIL C
SCALE 1 : 5

AR 14-74
CITY OF WORTHINGTON
PUD 02-14
DRAWING NO.

DATE 4-11-14

InSite

PROJECT NAME
Municipal Plan Commission/ Architectural Review Board
Worthington, OH

FRESH THYME FARMERS MARKET

SHEET TITLE
CART CORRAL AND SIGN PANEL DETAILS

PROJECT
Worthington, OH

ISSUE DATE
April 18, 2014

SCALE
1/8"=1'-0"

SHEET
13

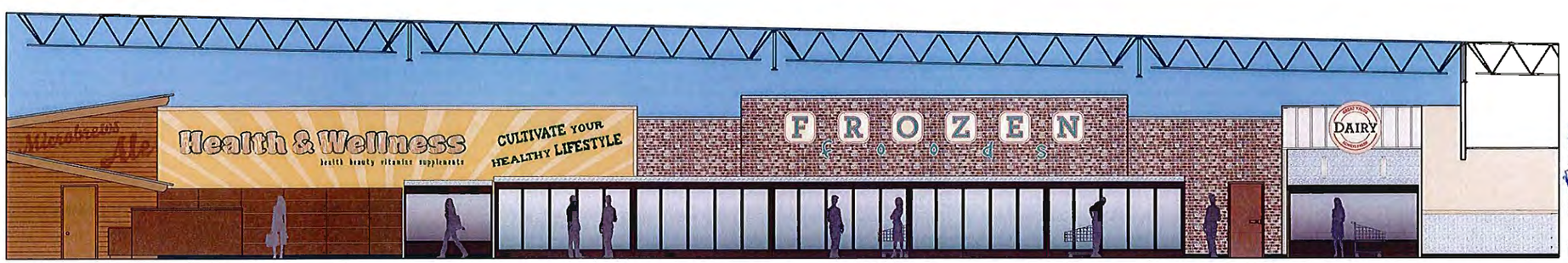

AR 14-14
CITY OF WORTHINGTON
PUD 02-14
DRAWING NO.

DATE 4-11-14

NOTE:
THIS DRAWING REPRESENTS THE PROTOTYPE STORE AND IS SUBJECT TO CHANGE.
THIS DRAWING IS NOT SITE SPECIFIC. THIS DRAWING IS FOR REFERENCE ONLY.

InSite

PROJECT NAME
Municipal Plan Commission/ Architectural Review Board
Worthington, OH

FRESH THYME FARMERS MARKET

SHEET TITLE
CHARACTER IMAGES
INTERIOR ELEVATIONS

PROJECT
Worthington, OH

ISSUE DATE
April 18, 2014

SCALE

SHEET
14

AR 14-14
CITY OF WORTHINGTON
PUD 02-14
DRAWING NO.
DATE 4-11-14

NOTE:
THIS DRAWING REPRESENTS THE PROTOTYPE STORE AND IS SUBJECT TO CHANGE.
THIS DRAWING IS NOT SITE SPECIFIC. THIS DRAWING IS FOR REFERENCE ONLY.

InSite

PROJECT NAME
Municipal Plan Commission/ Architectural Review Board
Worthington, OH

FRESH THYME FARMERS MARKET

SHEET TITLE
CHARACTER IMAGES
INTERIOR ELEVATIONS

PROJECT
Worthington, OH

ISSUE DATE
April 18, 2014

SCALE

SHEET
15

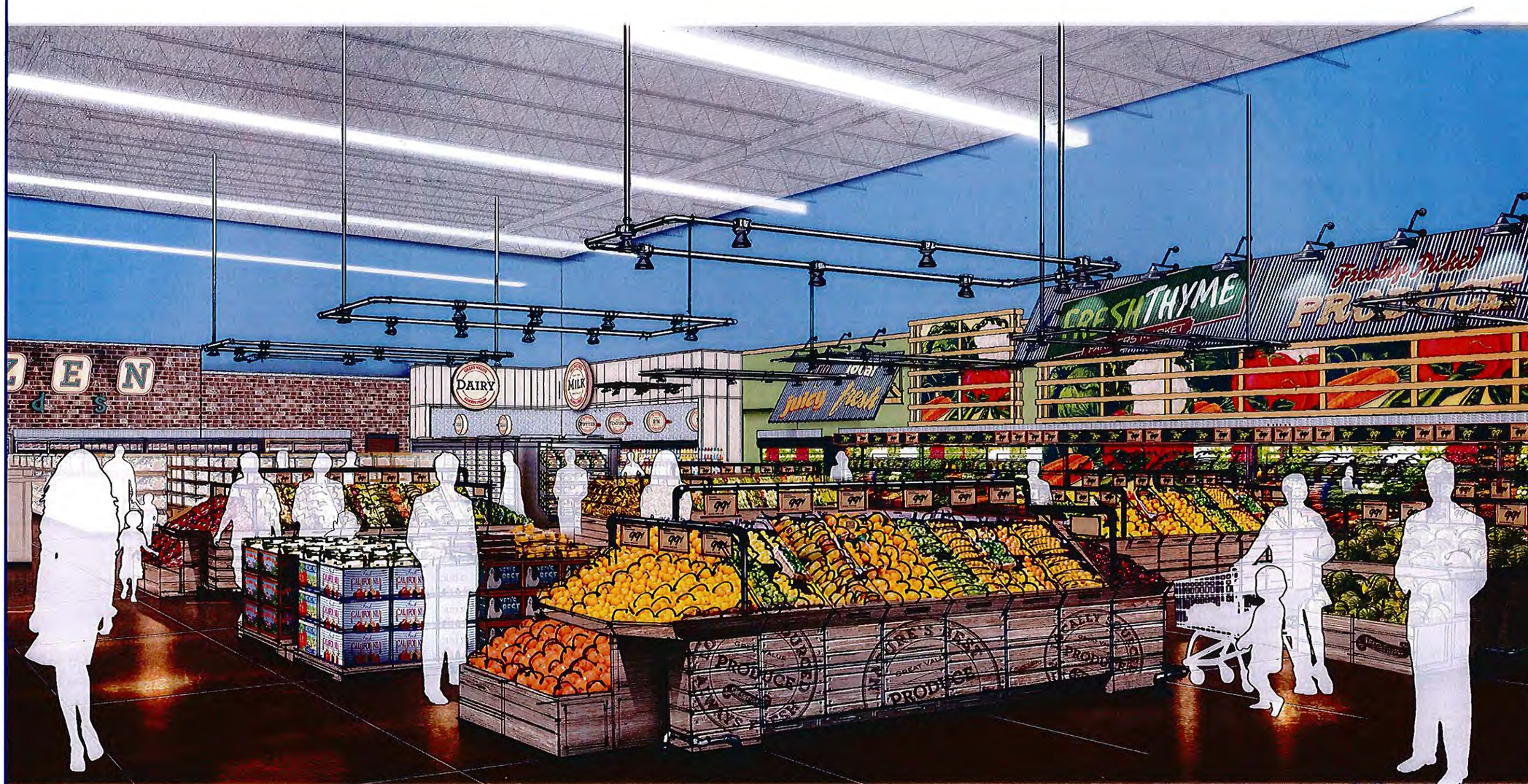

AR-14-14
CITY OF WORTHINGTON
PUD 02-14
DRAWING NO.

DATE 4-11-14

NOTE:
THIS DRAWING REPRESENTS THE PROTOTYPE STORE AND IS SUBJECT TO CHANGE.
THIS DRAWING IS NOT SITE SPECIFIC. THIS DRAWING IS FOR REFERENCE ONLY.

InSite

PROJECT NAME
Municipal Plan Commission/ Architectural Review Board
Worthington, OH

FRESH THYME FARMERS MARKET

SHEET TITLE
CHARACTER IMAGES
INTERIOR ELEVATIONS

PROJECT
Worthington, OH

ISSUE DATE
April 18, 2014

SCALE

SHEET
16

AR14-124 PUD 02-14

CITY OF WORTHINGTON
DRAWING NO.
DATE 4-11-14

NOTE:
THIS DRAWING REPRESENTS THE PROTOTYPE STORE AND IS SUBJECT TO CHANGE.
THIS DRAWING IS NOT SITE SPECIFIC. THIS DRAWING IS FOR REFERENCE ONLY.

InSite

PROJECT NAME
Municipal Plan Commission/ Architectural Review Board
Worthington, OH

FRESH THYME FARMERS MARKET

SHEET TITLE
CHARACTER IMAGES
INTERIOR ELEVATIONS

PROJECT
Worthington, OH

ISSUE DATE
April 18, 2014

SCALE

SHEET
17

NOTE:
THIS DRAWING REPRESENTS THE PROTOTYPE STORE AND IS SUBJECT TO CHANGE.
THIS DRAWING IS NOT SITE SPECIFIC. THIS DRAWING IS FOR REFERENCE ONLY.

InSite

PROJECT NAME
Municipal Plan Commission/ Architectural Review Board
Worthington, OH

FRESH THYME FARMERS MARKET

SHEET TITLE
CHARACTER IMAGES
INTERIOR ELEVATIONS

PROJECT
Worthington, OH

ISSUE DATE
April 18, 2014

SCALE

SHEET

DRAWING NO. 18

CITY OF WORTHINGTON
AR 14-14
PUD 02-14

DATE 4-11-14